SLVS079C – DECEMBER 1993 – REVISED AUGUST 1995

- **Low $r_{DS(on)}$ . . . 0.09 Ω Typ at V_{GS} = –10 V**
- **3 V Compatible**
- **Requires No External V_{CC}**
- **TTL and CMOS Compatible Inputs**
- **$V_{GS(th)}$ = –1.5 V Max**
- **Available in Ultrathin TSSOP Package (PW)**
- **ESD Protection Up to 2 kV per MIL-STD-883C, Method 3015**

D PACKAGE
(TOP VIEW)

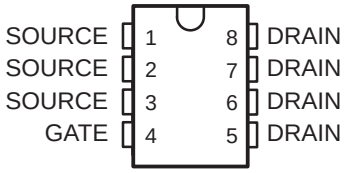

D PACKAGE

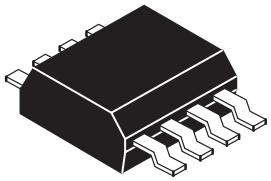

PW PACKAGE

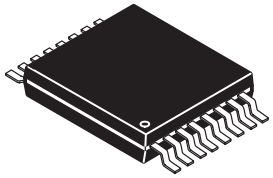

PW PACKAGE
(TOP VIEW)

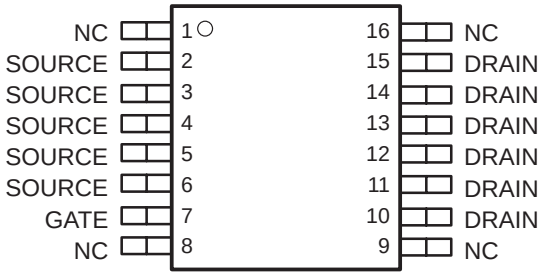

NC – No internal connection

description

The TPS1101 is a single, low-$r_{DS(on)}$, P-channel, enhancement-mode MOSFET. The device has been optimized for 3-V or 5-V power distribution in battery-powered systems by means of the Texas Instruments LinBiCMOS™ process. With a maximum $V_{GS(th)}$ of –1.5 V and an I_{DSS} of only 0.5 μA, the TPS1101 is the ideal high-side switch for low-voltage, portable battery-management systems where maximizing battery life is a primary concern. The low $r_{DS(on)}$ and excellent ac characteristics (rise time 5.5 ns typical) of the TPS1101 make it the logical choice for low-voltage switching applications such as power switches for pulse-width-modulated (PWM) controllers or motor/bridge drivers.

The ultrathin thin shrink small-outline package or TSSOP (PW) version fits in height-restricted places where other P-channel MOSFETs cannot. The size advantage is especially important where board height restrictions do not allow for an small-outline integrated circuit (SOIC) package. Such applications include notebook computers, personal digital assistants (PDAs), cellular telephones, and PCMCIA cards. For existing designs, the D-packaged version has a pinout common with other P-channel MOSFETs in SOIC packages.

AVAILABLE OPTIONS

T_J	PACKAGED DEVICES†		CHIP FORM (Y)
	SMALL OUTLINE (D)	TSSOP (PW)	
–40°C to 150°C	TPS1101D	TPS1101PWLE	TPS1101Y

† The D package is available taped and reeled. Add an R suffix to device type (e.g., TPS1101DR). The PW package is only available left-end taped and reeled (indicated by the LE suffix on the device type; e.g., TPS1101PWLE). The chip form is tested at 25°C.

Please be aware that an important notice concerning availability, standard warranty, and use in critical applications of Texas Instruments semiconductor products and disclaimers thereto appears at the end of this data sheet.

LinBiCMOS is a trademark of Texas Instruments Incorporated.

PRODUCTION DATA information is current as of publication date. Products conform to specifications per the terms of Texas Instruments standard warranty. Production processing does not necessarily include testing of all parameters.

Copyright © 1995, Texas Instruments Incorporated

schematic

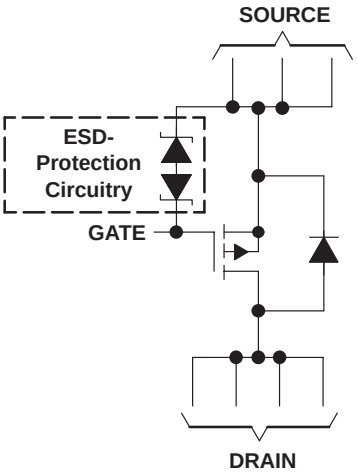

NOTE A: For all applications, all source terminals should be connected and all drain terminals should be connected.

TPS1101Y chip information

This chip, when properly assembled, displays characteristics similar to the TPS1101. Thermal compression or ultrasonic bonding may be used on the doped aluminum bonding pads. The chips may be mounted with conductive epoxy or a gold-silicon preform.

BONDING PAD ASSIGNMENTS

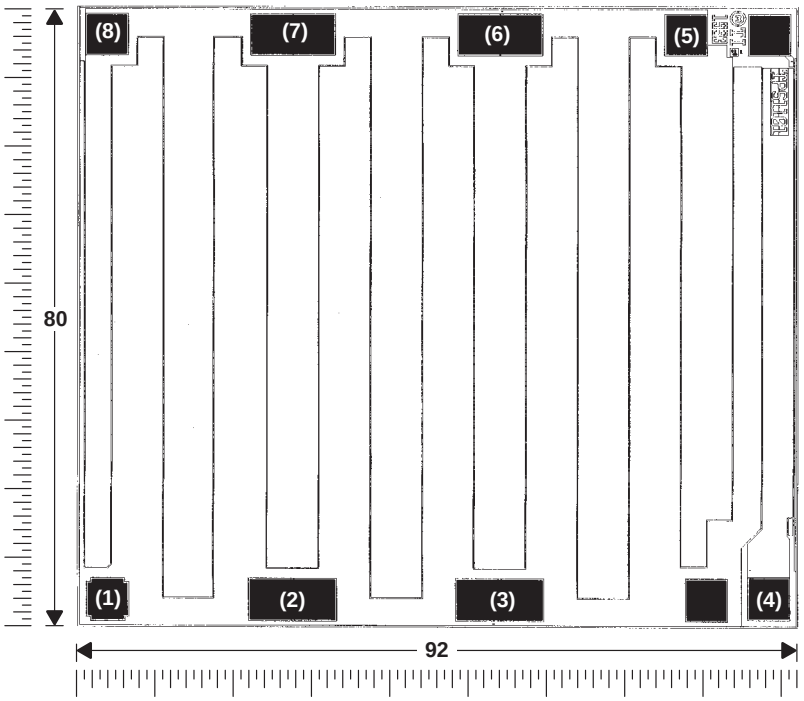

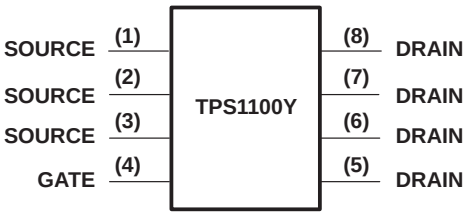

CHIP THICKNESS: 15 MILS TYPICAL

BONDING PADS: 4 × 4 MILS MINIMUM

$T_J$max = 150°C

TOLERANCES ARE ±10%

ALL DIMENSIONS ARE IN MILS

absolute maximum ratings over operating free-air temperature (unless otherwise noted)†

					UNIT
Drain-to-source voltage, V_{DS}				– 15	V
Gate-to-source voltage, V_{GS}				2 or – 15	V
Continuous drain current (T_J = 150°C), I_D‡	V_{GS} = –2.7 V	D package	T_A = 25°C	±0.62	A
			T_A = 125°C	±0.39	
		PW package	T_A = 25°C	±0.61	
			T_A = 125°C	±0.38	
	V_{GS} = –3 V	D package	T_A = 25°C	±0.88	
			T_A = 125°C	±0.47	
		PW package	T_A = 25°C	±0.86	
			T_A = 125°C	±0.45	
	V_{GS} = –4.5 V	D package	T_A = 25°C	±1.52	
			T_A = 125°C	±0.71	
		PW package	T_A = 25°C	±1.44	
			T_A = 125°C	±0.67	
	V_{GS} = –10 V	D package	T_A = 25°C	±2.30	
			T_A = 125°C	±1.04	
		PW package	T_A = 25°C	±2.18	
			T_A = 125°C	±0.98	
Pulsed drain current, I_D‡			T_A = 25°C	±10	A
Continuous source current (diode conduction), I_S			T_A = 25°C	–1.1	A
Storage temperature range, T_{stg}				–55 to 150	°C
Operating junction temperature range, T_J				–40 to 150	°C
Operating free-air temperature range, T_A				–40 to 125	°C
Lead temperature 1,6 mm (1/16 inch) from case for 10 seconds				260	°C

† Stresses beyond those listed under “absolute maximum ratings” may cause permanent damage to the device. These are stress ratings only, and functional operation of the device at these or any other conditions beyond those indicated under “recommended operating conditions” is not implied. Exposure to absolute-maximum-rated conditions for extended periods may affect device reliability.

‡ Maximum values are calculated using a derating factor based on $R_{\theta JA}$ = 158°C/W for the D package and $R_{\theta JA}$ = 176°C/W for the PW package. These devices are mounted on an FR4 board with no special thermal considerations.

DISSIPATION RATING TABLE

PACKAGE	$T_A \leq 25°C$ POWER RATING	DERATING FACTOR‡ ABOVE T_A = 25°C	T_A = 70°C POWER RATING	T_A = 85°C POWER RATING	T_A = 125°C POWER RATING
D	791 mW	6.33 mW/°C	506 mW	411 mW	158 mW
PW	710 mW	5.68 mW/°C	454 mW	369 mW	142 mW

‡ Maximum values are calculated using a derating factor based on $R_{\theta JA}$ = 158°C/W for the D package and $R_{\theta JA}$ = 176°C/W for the PW package. These devices are mounted on an FR4 board with no special thermal considerations.

electrical characteristics at T_J = 25°C (unless otherwise noted)

static

PARAMETER		TEST CONDITIONS			TPS1101 MIN	TPS1101 TYP	TPS1101 MAX	TPS1101Y MIN	TPS1101Y TYP	TPS1101Y MAX	UNIT
$V_{GS(th)}$	Gate-to-source threshold voltage	$V_{DS} = V_{GS}$,	$I_D = -250\ \mu A$		–1	–1.25	–1.5		–1.25		V
V_{SD}	Source-to-drain voltage (diode-forward voltage)†	$I_S = -1$ A,	$V_{GS} = 0$ V			–1.04			–1.04		V
I_{GSS}	Reverse gate current, drain short circuited to source	$V_{DS} = 0$ V,	$V_{GS} = -12$ V				±100				nA
I_{DSS}	Zero-gate-voltage drain current	$V_{DS} = -12$ V,	$V_{GS} = 0$ V	$T_J = 25°C$			–0.5				µA
				$T_J = 125°C$			–10				
$r_{DS(on)}$	Static drain-to-source on-state resistance†	$V_{GS} = -10$ V	$I_D = -2.5$ A			90			90		mΩ
		$V_{GS} = -4.5$ V	$I_D = -1.5$ A			134	190		134		
		$V_{GS} = -3$ V	$I_D = -0.5$ A			198	310		198		
		$V_{GS} = -2.7$ V				232	400		232		
g_{fs}	Forward transconductance†	$V_{DS} = -10$ V,	$I_D = -2$ A			4.3			4.3		S

† Pulse test: pulse duration ≤ 300 µs, duty cycle ≤ 2%

dynamic

PARAMETER		TEST CONDITIONS			TPS1101, TPS1101Y MIN	TPS1101, TPS1101Y TYP	TPS1101, TPS1101Y MAX	UNIT
Q_g	Total gate charge	$V_{DS} = -10$ V,	$V_{GS} = -10$ V,	$I_D = -1$ A		11.25		nC
Q_{gs}	Gate-to-source charge					1.5		
Q_{gd}	Gate-to-drain charge					2.6		
$t_{d(on)}$	Turn-on delay time	$V_{DD} = -10$ V, $R_G = 6\ \Omega$,	$R_L = 10\ \Omega$, See Figures 1 and 2	$I_D = -1$ A,		6.5		ns
$t_{d(off)}$	Turn-off delay time					19		ns
t_r	Rise time					5.5		ns
t_f	Fall time					13		
$t_{rr(SD)}$	Source-to-drain reverse recovery time	$I_F = 5.3$ A,	di/dt = 100 A/µs			16		

PARAMETER MEASUREMENT INFORMATION

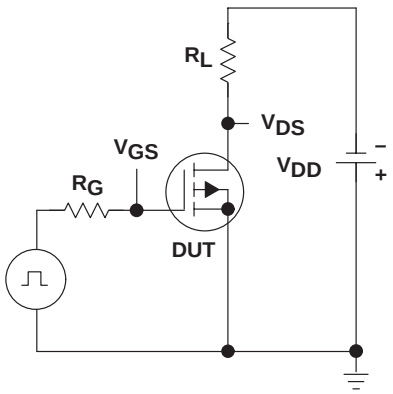

Figure 1. Switching-Time Test Circuit

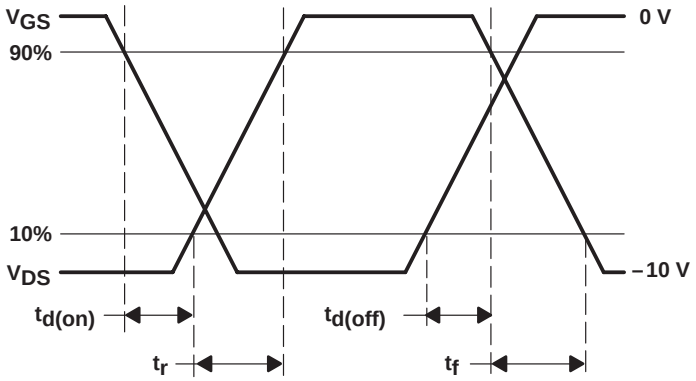

Figure 2. Switching-Time Waveforms

TYPICAL CHARACTERISTICS

Table of Graphs

		FIGURE
Drain current	vs Drain-to-source voltage	3
Drain current	vs Gate-to-source voltage	4
Static drain-to-source on-state resistance	vs Drain current	5
Capacitance	vs Drain-to-source voltage	6
Static drain-to-source on-state resistance (normalized)	vs Junction temperature	7
Source-to-drain diode current	vs Source-to-drain voltage	8
Static drain-to-source on-state resistance	vs Gate-to-source voltage	9
Gate-to-source threshold voltage	vs Junction temperature	10
Gate-to-source voltage	vs Gate charge	11

TYPICAL CHARACTERISTICS

DRAIN CURRENT vs DRAIN-TO-SOURCE VOLTAGE

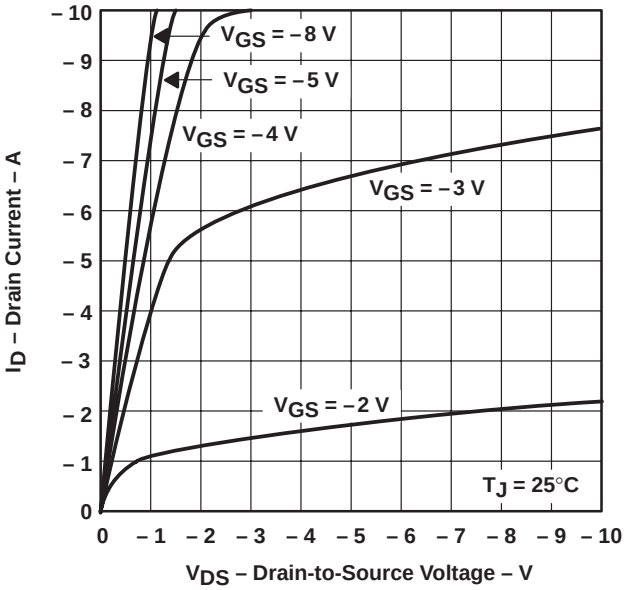

Figure 3

DRAIN CURRENT vs GATE-TO-SOURCE VOLTAGE

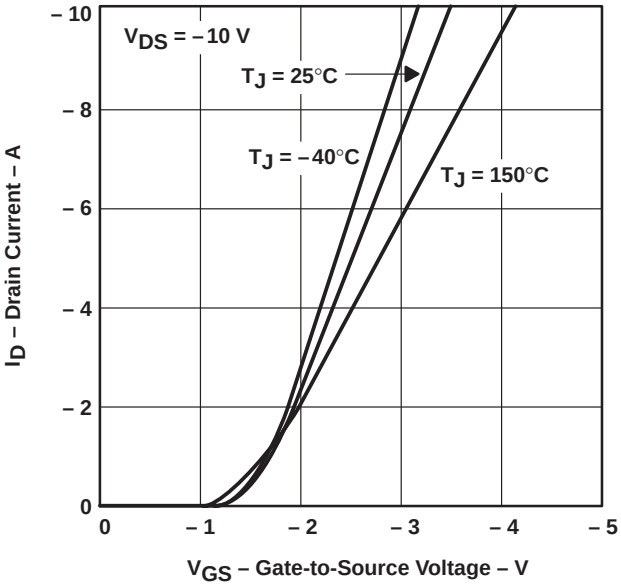

Figure 4

STATIC DRAIN-TO-SOURCE ON-STATE RESISTANCE vs DRAIN CURRENT

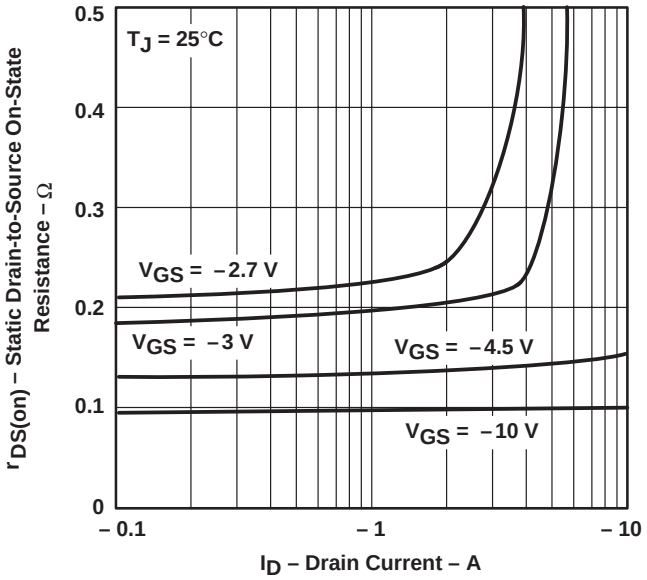

Figure 5

CAPACITANCE† vs DRAIN-TO-SOURCE VOLTAGE

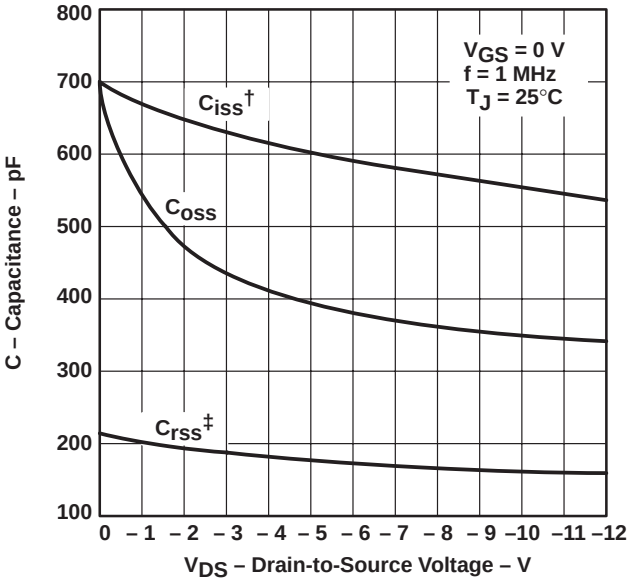

† $C_{iss} = C_{gs} + C_{gd}$, $C_{ds(shorted)}$

‡ $C_{rss} = C_{gd}$, $C_{oss} = C_{ds} + \frac{C_{gs}\,C_{gd}}{C_{gs} + C_{gd}} \approx C_{ds} + C_{gd}$

Figure 6

TYPICAL CHARACTERISTICS

STATIC DRAIN-TO-SOURCE ON-STATE RESISTANCE (NORMALIZED) vs JUNCTION TEMPERATURE

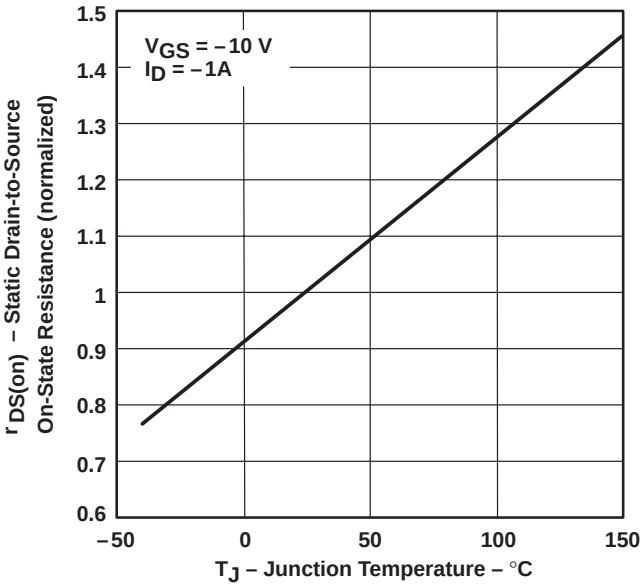

Figure 7

SOURCE-TO-DRAIN DIODE CURRENT vs SOURCE-TO-DRAIN VOLTAGE

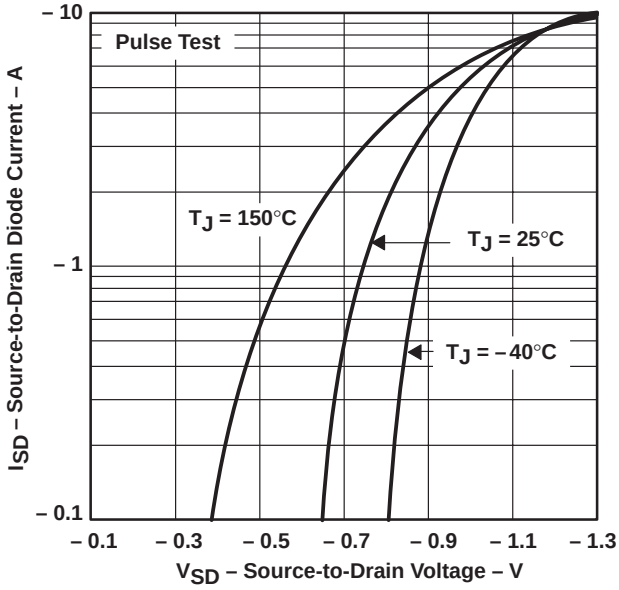

Figure 8

STATIC DRAIN-TO-SOURCE ON-STATE RESISTANCE vs GATE-TO-SOURCE VOLTAGE

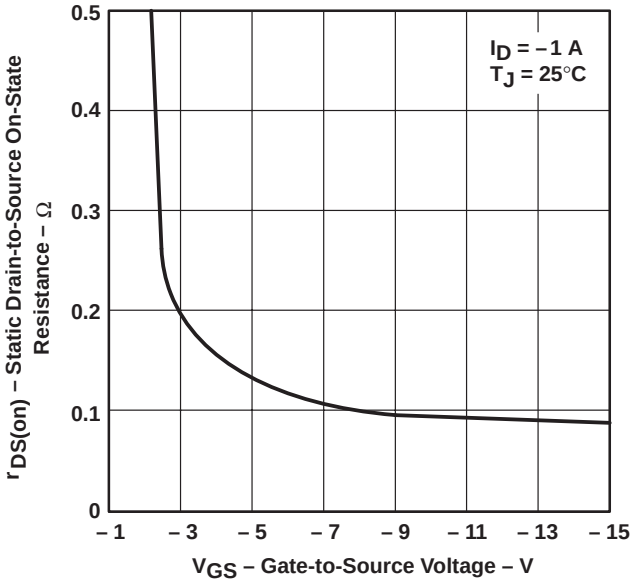

Figure 9

GATE-TO-SOURCE THRESHOLD VOLTAGE vs JUNCTION TEMPERATURE

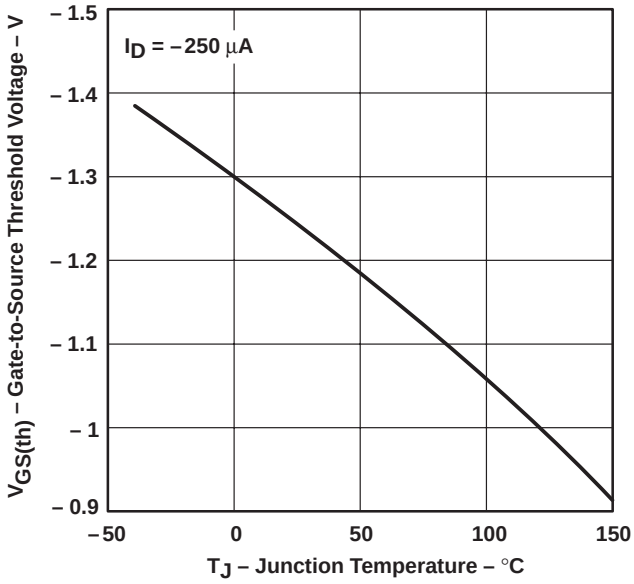

Figure 10

TYPICAL CHARACTERISTICS

GATE-TO-SOURCE VOLTAGE
vs
GATE CHARGE

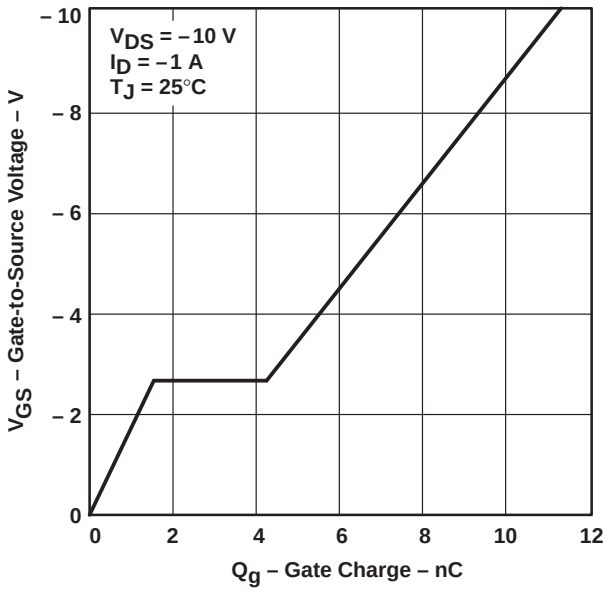

Figure 11

THERMAL INFORMATION

DRAIN CURRENT vs DRAIN-TO-SOURCE VOLTAGE

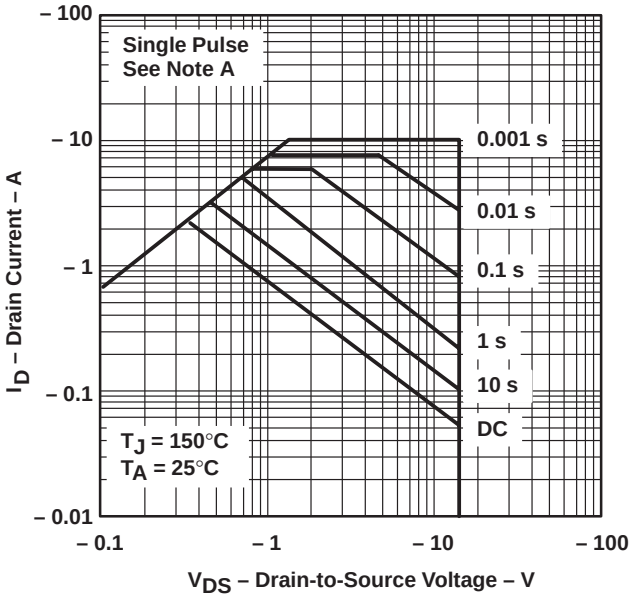

NOTE A: Values are for the D package and are FR4-board-mounted only.

Figure 12

TRANSIENT JUNCTION-TO-AMBIENT THERMAL IMPEDANCE vs PULSE DURATION

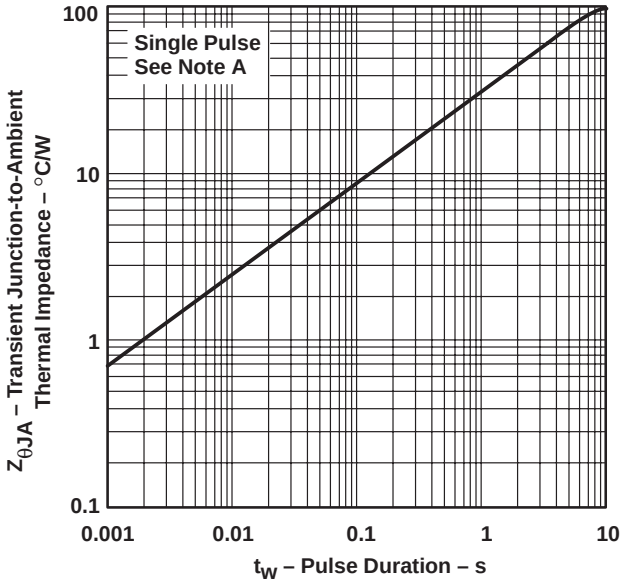

NOTE A: Values are for the D package and are FR4-board-mounted only.

Figure 13

APPLICATION INFORMATION

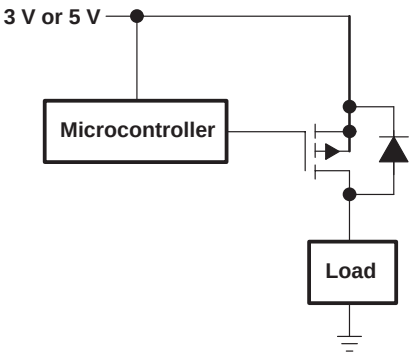

Figure 14. Notebook Load Management

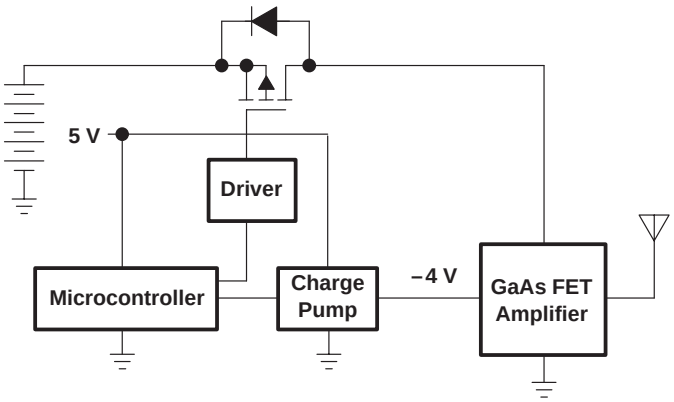

Figure 15. Cellular Phone Output Drive

PACKAGING INFORMATION

Orderable Device	Status [1]	Package Type	Package Drawing	Pins	Package Qty	Eco Plan [2]	Lead/Ball Finish	MSL Peak Temp [3]
TPS1101D	ACTIVE	SOIC	D	8	75	Green (RoHS & no Sb/Br)	CU NIPDAU	Level-1-260C-UNLIM
TPS1101DG4	ACTIVE	SOIC	D	8	75	Green (RoHS & no Sb/Br)	CU NIPDAU	Level-1-260C-UNLIM
TPS1101DR	ACTIVE	SOIC	D	8	2500	Green (RoHS & no Sb/Br)	CU NIPDAU	Level-1-260C-UNLIM
TPS1101DRG4	ACTIVE	SOIC	D	8	2500	Green (RoHS & no Sb/Br)	CU NIPDAU	Level-1-260C-UNLIM
TPS1101PWLE	OBSOLETE	TSSOP	PW	16		TBD	Call TI	Call TI
TPS1101PWR	ACTIVE	TSSOP	PW	16	2000	Green (RoHS & no Sb/Br)	CU NIPDAU	Level-1-260C-UNLIM
TPS1101PWRG4	ACTIVE	TSSOP	PW	16	2000	Green (RoHS & no Sb/Br)	CU NIPDAU	Level-1-260C-UNLIM

[1] The marketing status values are defined as follows:
ACTIVE: Product device recommended for new designs.
LIFEBUY: TI has announced that the device will be discontinued, and a lifetime-buy period is in effect.
NRND: Not recommended for new designs. Device is in production to support existing customers, but TI does not recommend using this part in a new design.
PREVIEW: Device has been announced but is not in production. Samples may or may not be available.
OBSOLETE: TI has discontinued the production of the device.

[2] Eco Plan - The planned eco-friendly classification: Pb-Free (RoHS), Pb-Free (RoHS Exempt), or Green (RoHS & no Sb/Br) - please check http://www.ti.com/productcontent for the latest availability information and additional product content details.
TBD: The Pb-Free/Green conversion plan has not been defined.
Pb-Free (RoHS): TI's terms "Lead-Free" or "Pb-Free" mean semiconductor products that are compatible with the current RoHS requirements for all 6 substances, including the requirement that lead not exceed 0.1% by weight in homogeneous materials. Where designed to be soldered at high temperatures, TI Pb-Free products are suitable for use in specified lead-free processes.
Pb-Free (RoHS Exempt): This component has a RoHS exemption for either 1) lead-based flip-chip solder bumps used between the die and package, or 2) lead-based die adhesive used between the die and leadframe. The component is otherwise considered Pb-Free (RoHS compatible) as defined above.
Green (RoHS & no Sb/Br): TI defines "Green" to mean Pb-Free (RoHS compatible), and free of Bromine (Br) and Antimony (Sb) based flame retardants (Br or Sb do not exceed 0.1% by weight in homogeneous material)

[3] MSL, Peak Temp. -- The Moisture Sensitivity Level rating according to the JEDEC industry standard classifications, and peak solder temperature.

Important Information and Disclaimer: The information provided on this page represents TI's knowledge and belief as of the date that it is provided. TI bases its knowledge and belief on information provided by third parties, and makes no representation or warranty as to the accuracy of such information. Efforts are underway to better integrate information from third parties. TI has taken and continues to take reasonable steps to provide representative and accurate information but may not have conducted destructive testing or chemical analysis on incoming materials and chemicals. TI and TI suppliers consider certain information to be proprietary, and thus CAS numbers and other limited information may not be available for release.

In no event shall TI's liability arising out of such information exceed the total purchase price of the TI part(s) at issue in this document sold by TI to Customer on an annual basis.

TAPE AND REEL INFORMATION

REEL DIMENSIONS

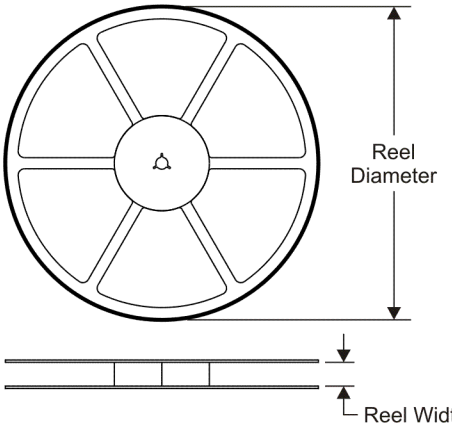

TAPE DIMENSIONS

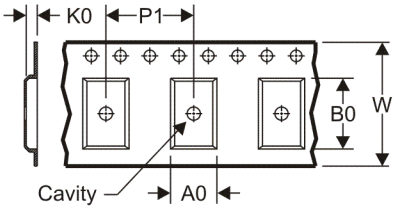

A0	Dimension designed to accommodate the component width
B0	Dimension designed to accommodate the component length
K0	Dimension designed to accommodate the component thickness
W	Overall width of the carrier tape
P1	Pitch between successive cavity centers

QUADRANT ASSIGNMENTS FOR PIN 1 ORIENTATION IN TAPE

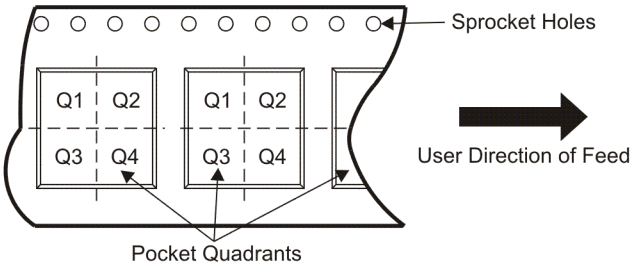

*All dimensions are nominal

Device	Package Type	Package Drawing	Pins	SPQ	Reel Diameter (mm)	Reel Width W1 (mm)	A0 (mm)	B0 (mm)	K0 (mm)	P1 (mm)	W (mm)	Pin1 Quadrant
TPS1101DR	SOIC	D	8	2500	330.0	12.4	6.4	5.2	2.1	8.0	12.0	Q1
TPS1101PWR	TSSOP	PW	16	2000	330.0	12.4	6.9	5.6	1.6	8.0	12.0	Q1

TAPE AND REEL BOX DIMENSIONS

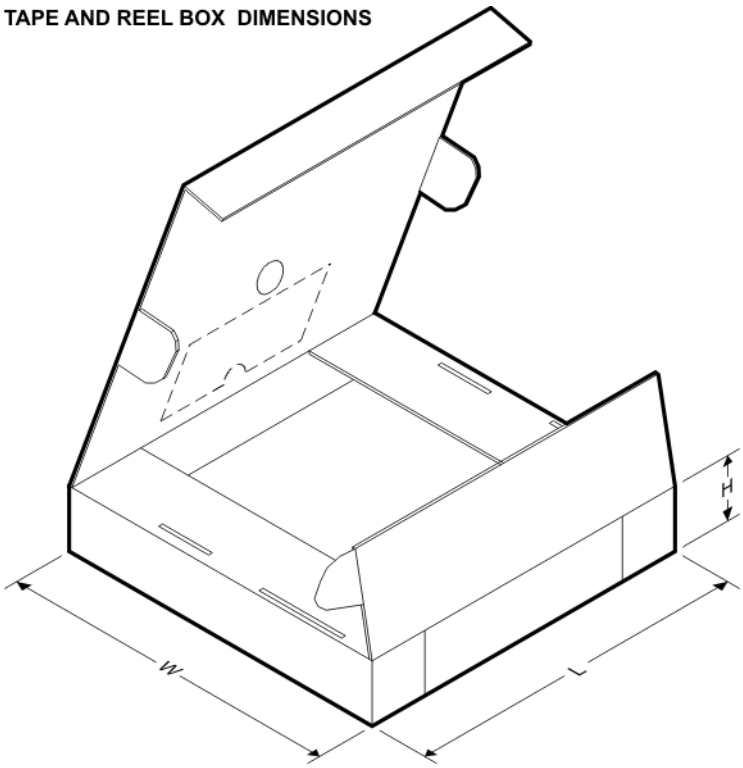

*All dimensions are nominal

Device	Package Type	Package Drawing	Pins	SPQ	Length (mm)	Width (mm)	Height (mm)
TPS1101DR	SOIC	D	8	2500	340.5	338.1	20.6
TPS1101PWR	TSSOP	PW	16	2000	346.0	346.0	29.0

IMPORTANT NOTICE

Texas Instruments Incorporated and its subsidiaries (TI) reserve the right to make corrections, modifications, enhancements, improvements, and other changes to its products and services at any time and to discontinue any product or service without notice. Customers should obtain the latest relevant information before placing orders and should verify that such information is current and complete. All products are sold subject to TI's terms and conditions of sale supplied at the time of order acknowledgment.

TI warrants performance of its hardware products to the specifications applicable at the time of sale in accordance with TI's standard warranty. Testing and other quality control techniques are used to the extent TI deems necessary to support this warranty. Except where mandated by government requirements, testing of all parameters of each product is not necessarily performed.

TI assumes no liability for applications assistance or customer product design. Customers are responsible for their products and applications using TI components. To minimize the risks associated with customer products and applications, customers should provide adequate design and operating safeguards.

TI does not warrant or represent that any license, either express or implied, is granted under any TI patent right, copyright, mask work right, or other TI intellectual property right relating to any combination, machine, or process in which TI products or services are used. Information published by TI regarding third-party products or services does not constitute a license from TI to use such products or services or a warranty or endorsement thereof. Use of such information may require a license from a third party under the patents or other intellectual property of the third party, or a license from TI under the patents or other intellectual property of TI.

Reproduction of TI information in TI data books or data sheets is permissible only if reproduction is without alteration and is accompanied by all associated warranties, conditions, limitations, and notices. Reproduction of this information with alteration is an unfair and deceptive business practice. TI is not responsible or liable for such altered documentation. Information of third parties may be subject to additional restrictions.

Resale of TI products or services with statements different from or beyond the parameters stated by TI for that product or service voids all express and any implied warranties for the associated TI product or service and is an unfair and deceptive business practice. TI is not responsible or liable for any such statements.

TI products are not authorized for use in safety-critical applications (such as life support) where a failure of the TI product would reasonably be expected to cause severe personal injury or death, unless officers of the parties have executed an agreement specifically governing such use. Buyers represent that they have all necessary expertise in the safety and regulatory ramifications of their applications, and acknowledge and agree that they are solely responsible for all legal, regulatory and safety-related requirements concerning their products and any use of TI products in such safety-critical applications, notwithstanding any applications-related information or support that may be provided by TI. Further, Buyers must fully indemnify TI and its representatives against any damages arising out of the use of TI products in such safety-critical applications.

TI products are neither designed nor intended for use in military/aerospace applications or environments unless the TI products are specifically designated by TI as military-grade or "enhanced plastic." Only products designated by TI as military-grade meet military specifications. Buyers acknowledge and agree that any such use of TI products which TI has not designated as military-grade is solely at the Buyer's risk, and that they are solely responsible for compliance with all legal and regulatory requirements in connection with such use.

TI products are neither designed nor intended for use in automotive applications or environments unless the specific TI products are designated by TI as compliant with ISO/TS 16949 requirements. Buyers acknowledge and agree that, if they use any non-designated products in automotive applications, TI will not be responsible for any failure to meet such requirements.

Following are URLs where you can obtain information on other Texas Instruments products and application solutions:

Products		**Applications**	
Amplifiers	amplifier.ti.com	Audio	www.ti.com/audio
Data Converters	dataconverter.ti.com	Automotive	www.ti.com/automotive
DLP® Products	www.dlp.com	Communications and Telecom	www.ti.com/communications
DSP	dsp.ti.com	Computers and Peripherals	www.ti.com/computers
Clocks and Timers	www.ti.com/clocks	Consumer Electronics	www.ti.com/consumer-apps
Interface	interface.ti.com	Energy	www.ti.com/energy
Logic	logic.ti.com	Industrial	www.ti.com/industrial
Power Mgmt	power.ti.com	Medical	www.ti.com/medical
Microcontrollers	microcontroller.ti.com	Security	www.ti.com/security
RFID	www.ti-rfid.com	Space, Avionics & Defense	www.ti.com/space-avionics-defense
RF/IF and ZigBee® Solutions	www.ti.com/lprf	Video and Imaging	www.ti.com/video
		Wireless	www.ti.com/wireless-apps

Mailing Address: Texas Instruments, Post Office Box 655303, Dallas, Texas 75265
Copyright © 2010, Texas Instruments Incorporated