SLFS007A – JUNE 1985 – REVISED JULY 1990

- **Low Output Common-Mode Sensitivity to AGC Voltages**
- **Input and Output Impedances Independent of AGC Voltage**
- **Peak Gain . . . 38 dB Typ**
- **Wide AGC Range . . . 50 dB Typ**
- **3-dB Bandwidth . . . 50 MHz**
- **Other Characteristics Similar to NE592 and uA733**

D OR P PACKAGE
(TOP VIEW)

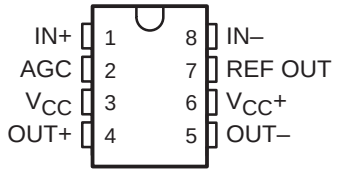

symbol

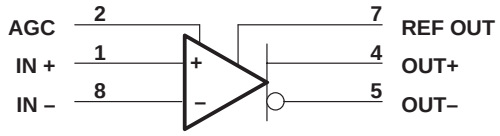

description

This device is a monolithic two-stage high-frequency amplifier with differential inputs and outputs.

Internal feedback provides wide bandwidth, low phase distortion, and excellent gain stability. Variable gain based on signal summation provides large AGC control over a wide bandwidth with low harmonic distortion. Emitter-follower outputs enable the device to drive capacitive loads. All stages are current-source biased to obtain high common-mode and supply-voltage rejection ratios. The gain may be electronically attenuated by applying a control voltage to the AGC pin. No external compensation components are required.

This device is particularly useful in TV and radio IF and RF AGC circuits, as well as magnetic-tape and disk-file systems where AGC is needed. Other applications include video and pulse amplifiers where a large AGC range, wide bandwidth, low phase shift, and excellent gain stability are required.

The TL026C is characterized for operation from 0°C to 70°C.

absolute maximum ratings over operating free-air temperature range (unless otherwise noted)†

Supply voltage, V_{CC+} (see Note 1) . . . . . 8 V
Supply voltage, V_{CC-} (see Note 1) . . . . . – 8 V
Differential input voltage . . . . . ±5 V
Common-mode input voltage . . . . . ±6 V
Output current . . . . . ±10 mA
Continuous total dissipation . . . . . See Dissipation Rating Table
Operating free-air temperature range . . . . . 0°C to 70°C
Storage temperature range . . . . . – 65°C to 150°C
Lead temperature range 1,6 mm (1/16 inch) from case for 10 seconds . . . . . 260°C

† Stresses beyond those listed under absolute maximum ratings may cause permanent damage to the device. This is a stress rating only, and functional operation of the device at these or any other conditions beyond those indicated in the recommended operating conditions section of this specification is not implied. Exposure to absolute-maximum-rated conditions for extended periods may affect device reliability.

NOTE 1: All voltages are with respect to the midpoint of V_{CC+} and V_{CC-} except differential input and output voltages.

DISSIPATION RATING TABLE

PACKAGE	$T_A \le 25°C$ POWER RATING	OPERATING FACTOR ABOVE $T_A = 25°C$	$T_A = 70°C$ POWER RATING
D	725 mW	5.8 mW/°C	464 mW
P	1000 mW	8.0 mW/°C	640 mW

PRODUCTION DATA information is current as of publication date. Products conform to specifications per the terms of Texas Instruments standard warranty. Production processing does not necessarily include testing of all parameters.

Copyright © 1990, Texas Instruments Incorporated

recommended operating conditions

	MIN	NOM	MAX	UNIT
Supply voltage, V_{CC+}	3	6	8	V
Supply voltage, V_{CC-}	– 3	– 6	– 8	V
Operating free-air temperature range, T_A	0		70	°C

electrical characteristics at 25°C operating free-air temperature, $V_{CC+} = \pm 6$ V, $V_{AGC} = 0$, REF OUT pin open (unless otherwise specified)

PARAMETER		FIGURE	TEST CONDITIONS	MIN	TYP	MAX	UNIT
A_{VD}	Large-signal differential voltage amplification	1	$V_{O(PP)}$ = 3 V, R_L = 2 kΩ	65	85	105	V/V
ΔA_{VD}	Change in voltage amplification	1	V_{IPP} = 28.5 mV, R_L = 2 kΩ, $V_{AGC} - V_{ref} = \pm 180$ mV		– 50		dB
V_{ref}	Voltage at REF OUT		I_{ref} = – 1 mA to 100 µA	1.3		1.5	V
BW	Bandwidth (–3 dB)	2	$V_{O(PP)}$ = 1 V, $V_{AGC} - V_{ref} = \pm 180$ mV		50		MHz
I_{IO}	Input offset current				0.4	5	µA
I_{IB}	Input bias current				10	30	µA
V_{ICR}	Common-mode input voltage range	3		±1			V
V_{OC}	Common-mode output voltage	1	$R_L = \infty$	3.25	3.75	4.25	V
ΔV_{OC}	Change in common-mode output voltage	1	V_{AGC} = 0 to 2 V, $R_L = \infty$			300	mV
V_{OO}	Output offset voltage	1	V_{ID} = 0, $R_L = \infty$			0.75	V
$V_{O(PP)}$	Maximum peak-to-peak output voltage swing	1	R_L = 2 kΩ	3	4		V
r_i	Input resistance at AGC, IN+, or IN –			10	30		kΩ
r_o	Output resistance				20		Ω
CMRR	Common-mode rejection ratio	3	V_{IC} = ±1 V, f = 100 kHz	60	86		dB
			V_{IC} = ±1 V, f = 5 mHz		60		
k_{SVR}	Supply voltage rejection ratio ($\Delta V_{CC} / \Delta V_{IO}$)	4	$\Delta V_{CC+} = \pm 0.5$ V, $\Delta V_{CC-} = \pm 0.5$ V	50	70		dB
V_n	Broadband equivalent noise voltage	4	BW = 1 kHz to 10 MHz		12		µV
t_{pd}	Propagation delay time	2	ΔV_O = 1 V		6	10	ns
t_r	Rise time	2	ΔV_O = 1 V		4.5	12	ns
$I_{sink(max)}$	Maximum output sink current		V_{ID} = 1 V, V_O = 3 V	3	4		mA
I_{CC}	Supply current		No load, No signal		22	27	mA

electrical characteristics over recommended operating free-air temperature range, $V_{CC\pm} = \pm 6$ V, $V_{AGC} = 0$, REF OUT pin open (unless otherwise specified)

PARAMETER		FIGURE	TEST CONDITIONS	MIN	TYP	MAX	UNIT
A_{VD}	Large-signal differential voltage amplification	1	$V_{O(PP)} = 3$ V, $R_L = 2$ kΩ	55		115	V/V
I_{IO}	Input offset current					6	μA
I_{IB}	Input bias current					40	μA
V_{ICR}	Common-mode input voltage range	3		±1			V
V_{OO}	Output offset voltage	1	$V_{ID} = 0$, $R_L = \infty$			1.5	V
$V_{O(PP)}$	Maximum peak-to-peak output voltage swing	1	$R_L = 2$ kΩ	2.8			V
r_i	Input resistance at AGC, IN+, or IN –			8			kΩ
CMRR	Common-mode rejection ratio	3	$V_{IC} = \pm 1$ V, f = 100 kHz	50			dB
k_{SVR}	Supply voltage rejection ratio ($\Delta V_{CC} / \Delta V_{IO}$)	4	$\Delta V_{CC+} = \pm 0.5$ V, $\Delta V_{CC-} = \pm 0.5$ V	50			dB
$I_{sink(max)}$	Maximum output sink current		$V_{ID} = 1$ V, $V_O = 3$ V	2.8	4		mA
I_{CC}	Supply current	1	No load, No signal			30	mA

PARAMETER MEASUREMENT INFORMATION

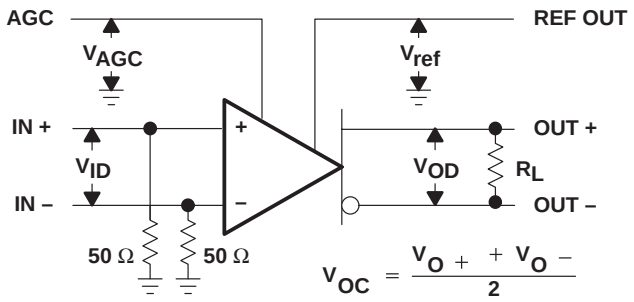

Figure 1. Test Circuit

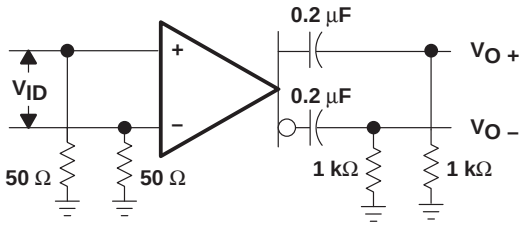

Figure 2. Test Circuit

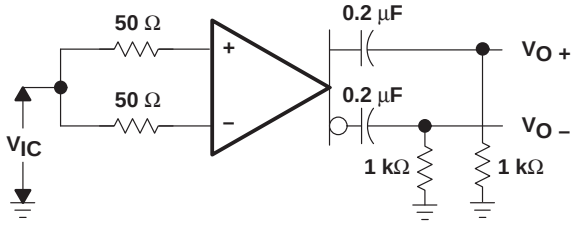

Figure 3. Test Circuit

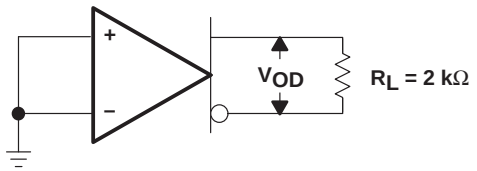

Figure 4. Test Circuit

TYPICAL CHARACTERISTICS

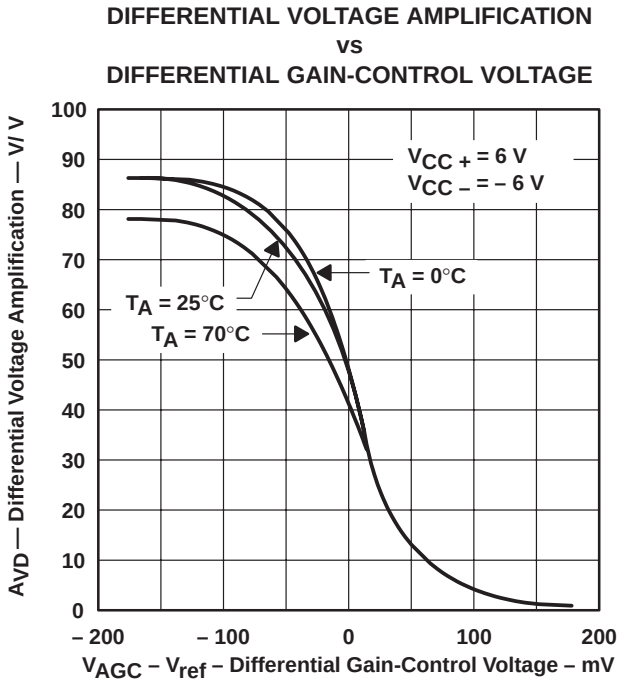

Figure 5

APPLICATION INFORMATION

gain characteristics

Figure 5 shows the differential voltage amplification versus the differential gain-control voltage ($V_{AGC} - V_{ref}$). V_{AGC} is the absolute voltage applied to the A_{GC} input and V_{ref} is the dc voltage at the REF OUT output. As V_{AGC} increases with respect to V_{ref}, the TL026C gain changes from maximum to minimum. As shown in Figure 5 for example, V_{AGC} would have to vary from approximately 180 mV less than V_{ref} to approximately 180 mV greater than V_{ref} to change the gain from maximum to minimum. The total signal change in V_{AGC} is defined by the following equation.

$$\Delta V_{AGC} = V_{ref} + 180\text{ mV} - (V_{ref} - 180\text{ mV}) \quad (1)$$

$$\Delta V_{AGC} = 360\text{ mV}$$

However, because V_{AGC} varies as the ac AGC signal varies and also differentially around V_{ref}, then V_{AGC} should have an ac signal component and a dc component. To preserve the dc and thermal tracking of the device, this dc voltage must be generated from V_{ref}. To apply proper bias to the AGC input, the external circuit used to generate V_{AGC} must combine these two voltages. Figures 6 and 7 show two circuits that will perform this operation and are easy to implement. The circuits use a standard dual operational amplifier for AGC feedback. By providing rectification and the required feedback gain, these circuits are also complete AGC systems.

circuit operation

Amplifier A1 amplifies and inverts the rectified and filtered AGC signal voltage V_C producing output voltage V1. Amplifier A2 is a differential amplifier that inverts V1 again and adds the scaled V_{ref} voltage. This conditioning makes V_{AGC} the sum of the signal plus the scaled V_{ref}. As the signal voltage increases, V_{AGC} increases and the gain of the TL026C is reduced. This maintains a constant output level.

feedback circuit equations

Following the AGC input signal (Figures 6 and 7) from the OUT output through the feedback amplifiers to the AGC input produces the following equations:

1. AC ouput to diode D1, assuming sinusoidal signals

$$V_O = V_{OP}\,(\sin(wt)) \quad (2)$$

where:

V_{OP} = peak voltage of V_O

2. Diode D1 and capacitor C1 output

$$V_C = V_{OP} - V_F \quad (3)$$

where:

VF = forward voltage drop of D1

V_C = voltage across capacitor C1

3. A1 output

$$V1 = -\frac{R2}{R1}\,V_C \quad (4)$$

4. A2 output (R3 = R4)

$$V_{AGC} = \frac{R2}{R1}\,V_C + 2\frac{R6}{R5 + R6}\,V_{ref} \quad (5)$$

APPLICATION INFORMATION

Amplifier A2 inverts V1 producing a positive AGC signal voltage. Therefore, the input voltage to the TL026C AGC pin consists of an AGC signal equal to:

$$\frac{R2}{R1} V_C \tag{6}$$

and a dc voltage derived from V_{ref}, defined as the quiescent value of V_{AGC}.

$$V_{AGC}(q) = 2\frac{R6}{R5 + R6}V_{ref} \tag{7}$$

For the initial resistor calculations, V_{ref} is assumed to be typically 1.4 V making quiescent V_{AGC} approximately 1.22 V ($V_{AGC}(q) = V_{ref} – 180$ mV). This voltage allows the TL026C to operate at maximum gain under no-signal and low-signal conditions. In addition, with V_{ref} used as both internal and external reference, its variation from device to device automatically adjusts the overall bias and makes AGC operation essentially independent of the absolute value of V_{ref}. The resistor divider needs to be calculated only once and is valid for the full tolerance of V_{ref}.

output voltage limits (see Figures 6 and 7)

The output voltage level desired must fall within the following limits:

1. Because the data sheet minimum output swing is 3 V peak-to-peak using a 2-kΩ load resistor, the user-selected design limit for the peak output swing should not exceed 1.5 V.
2. The voltage drop of the rectifying diode determines the lower voltage limit. When a silicon diode is used, this voltage is approximately 0.7 V. The output voltage V_O must have sufficient amplitude to exceed the rectifying diode drop. Aschottky diode can be used to reduce the V_O level required.

gain calculations for a peak output voltage of 1 V

A peak output voltage of 1 V was chosen for gain calculations because it is approximately midway between the limits of conditions 1 and 2 in the preceding paragraph.

Using equation 3 ($V_C = V_{OP} – V_d$), V_C is calculated as follows:

$V_C = 1\text{ V} – 0.7\text{ V}$

$V_C = 0.3\text{ V}$

Therefore, the gain of A1 must produce a voltage V1 that is equal to or greater than the total change in V_{AGC} for maximum TL026C gain change.

With a total change in V_{AGC} of 360 mV and using equation 4, the calculation is as follows:

$$-\frac{V1}{V_C} = \frac{\Delta V_{AGC}}{V_C} = \frac{R2}{R1} = \frac{0.36}{0.3} = 1.2$$

If R1 is 10 kΩ, R2 is 1.2 time R1 or 12 kΩ.

Since the output voltage for this circuit must be between 0.85 V and 1.3 V, the component values in Figures 6 and 7 provide a nominal 1-V peak output limit. This limit is the best choice to allow for temperature variations of the diode and minimum output voltage specification.

APPLICATION INFORMATION

The circuit values in Figures 6 and 7 will produce the best results in this general application. Because of rectification and device input constraints, the circuit in Figure 6 will not provide attenuation and has about 32 dB of control range. The circuit shown in Figure 7 will have approximately 25% variation in the peak output voltage limit due to the variation in gain of the TL592 device to device. In addition, if a lower output voltage is desired, the output of the TL026C can be used for approximately 40 mV of controlled signal.

considerations for the use of the TL026C

To obtain the most reliable results, RF breadboarding techniques must be used. A groundplane board should be used and power supplies should be bypassed with 0.1-µF capacitors. Input leads and output leads should be as short as possible and separated from each other.

A peak input voltage greater than 200 mV will begin to saturate the input stages of the TL026C and, while the circuit is in the AGC mode, the output signal may become distorted.

To observe the output signal of TL026C or TL592, low-capacitance FET probes or the output voltage divider technique shown in Figure 6 should be used.

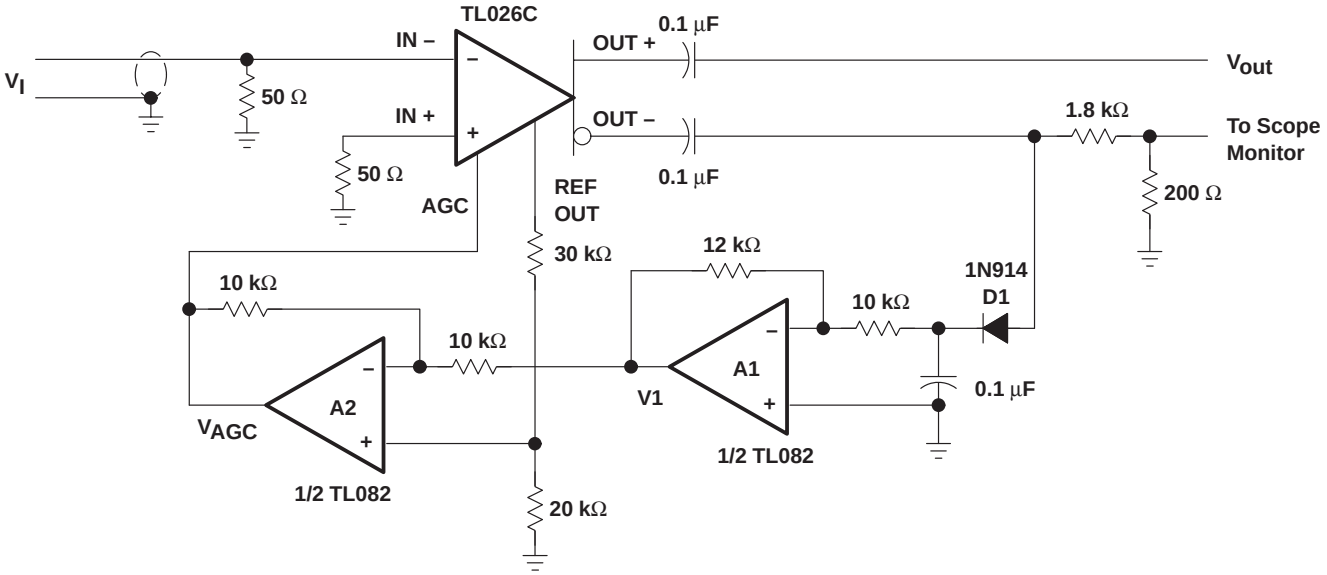

NOTE: V_{CC+} = 6 V and V_{CC-} = – 6 V for TL026C and amplifiers A1 and A2.

Figure 6. Typical Application Circuit With No Attenuation

APPLICATION INFORMATION

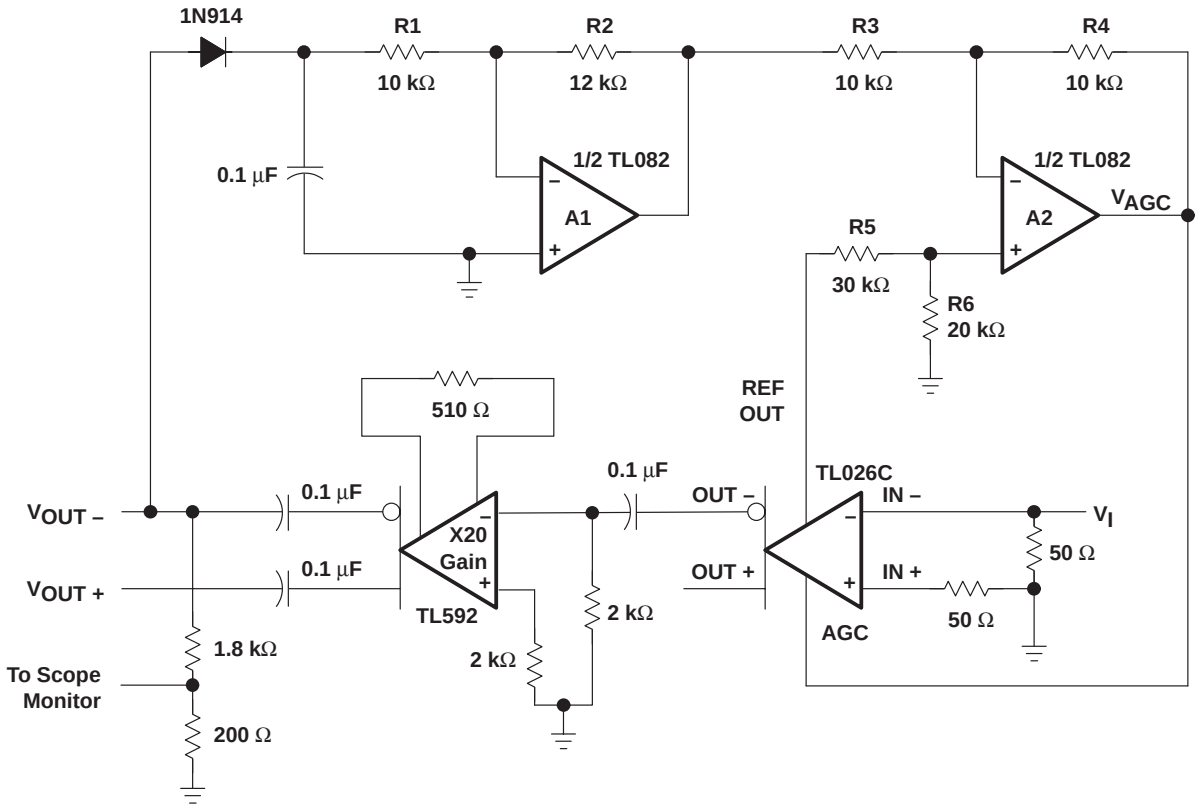

NOTE: V_{CC+} = 6 V and V_{CC-} = – 6 V for TL026C and amplifiers A1 and A2.

Figure 7. Typical Application Circuit With Attenuation

PACKAGING INFORMATION

Orderable Device	Status [1]	Package Type	Package Drawing	Pins	Package Qty	Eco Plan [2]	Lead/Ball Finish	MSL Peak Temp [3]
TL026CD	ACTIVE	SOIC	D	8	75	Green (RoHS & no Sb/Br)	CU NIPDAU	Level-2-260C-1 YEAR
TL026CDE4	ACTIVE	SOIC	D	8	75	Green (RoHS & no Sb/Br)	CU NIPDAU	Level-2-260C-1 YEAR
TL026CDG4	ACTIVE	SOIC	D	8	75	Green (RoHS & no Sb/Br)	CU NIPDAU	Level-2-260C-1 YEAR
TL026CDR	ACTIVE	SOIC	D	8	2500	Green (RoHS & no Sb/Br)	CU NIPDAU	Level-2-260C-1 YEAR
TL026CDRE4	ACTIVE	SOIC	D	8	2500	Green (RoHS & no Sb/Br)	CU NIPDAU	Level-2-260C-1 YEAR
TL026CDRG4	ACTIVE	SOIC	D	8	2500	Green (RoHS & no Sb/Br)	CU NIPDAU	Level-2-260C-1 YEAR
TL026CP	ACTIVE	PDIP	P	8	50	Pb-Free (RoHS)	CU NIPDAU	N / A for Pkg Type
TL026CPE4	ACTIVE	PDIP	P	8	50	Pb-Free (RoHS)	CU NIPDAU	N / A for Pkg Type
TL026CPSR	ACTIVE	SO	PS	8	2000	Green (RoHS & no Sb/Br)	CU NIPDAU	Level-1-260C-UNLIM
TL026CPSRE4	ACTIVE	SO	PS	8	2000	Green (RoHS & no Sb/Br)	CU NIPDAU	Level-1-260C-UNLIM
TL026CPSRG4	ACTIVE	SO	PS	8	2000	Green (RoHS & no Sb/Br)	CU NIPDAU	Level-1-260C-UNLIM
TL026ID	OBSOLETE	SOIC	D	8		TBD	Call TI	Call TI

[1] The marketing status values are defined as follows:
ACTIVE: Product device recommended for new designs.
LIFEBUY: TI has announced that the device will be discontinued, and a lifetime-buy period is in effect.
NRND: Not recommended for new designs. Device is in production to support existing customers, but TI does not recommend using this part in a new design.
PREVIEW: Device has been announced but is not in production. Samples may or may not be available.
OBSOLETE: TI has discontinued the production of the device.

[2] Eco Plan - The planned eco-friendly classification: Pb-Free (RoHS), Pb-Free (RoHS Exempt), or Green (RoHS & no Sb/Br) - please check http://www.ti.com/productcontent for the latest availability information and additional product content details.
TBD: The Pb-Free/Green conversion plan has not been defined.
Pb-Free (RoHS): TI's terms "Lead-Free" or "Pb-Free" mean semiconductor products that are compatible with the current RoHS requirements for all 6 substances, including the requirement that lead not exceed 0.1% by weight in homogeneous materials. Where designed to be soldered at high temperatures, TI Pb-Free products are suitable for use in specified lead-free processes.
Pb-Free (RoHS Exempt): This component has a RoHS exemption for either 1) lead-based flip-chip solder bumps used between the die and package, or 2) lead-based die adhesive used between the die and leadframe. The component is otherwise considered Pb-Free (RoHS compatible) as defined above.
Green (RoHS & no Sb/Br): TI defines "Green" to mean Pb-Free (RoHS compatible), and free of Bromine (Br) and Antimony (Sb) based flame retardants (Br or Sb do not exceed 0.1% by weight in homogeneous material)

[3] MSL, Peak Temp. -- The Moisture Sensitivity Level rating according to the JEDEC industry standard classifications, and peak solder temperature.

Important Information and Disclaimer: The information provided on this page represents TI's knowledge and belief as of the date that it is provided. TI bases its knowledge and belief on information provided by third parties, and makes no representation or warranty as to the accuracy of such information. Efforts are underway to better integrate information from third parties. TI has taken and continues to take reasonable steps to provide representative and accurate information but may not have conducted destructive testing or chemical analysis on incoming materials and chemicals. TI and TI suppliers consider certain information to be proprietary, and thus CAS numbers and other limited information may not be available for release.

In no event shall TI's liability arising out of such information exceed the total purchase price of the TI part(s) at issue in this document sold by TI to Customer on an annual basis.

TAPE AND REEL INFORMATION

REEL DIMENSIONS

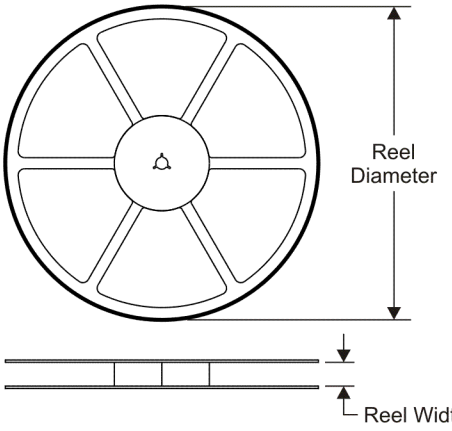

TAPE DIMENSIONS

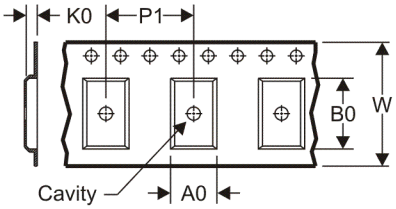

A0	Dimension designed to accommodate the component width
B0	Dimension designed to accommodate the component length
K0	Dimension designed to accommodate the component thickness
W	Overall width of the carrier tape
P1	Pitch between successive cavity centers

QUADRANT ASSIGNMENTS FOR PIN 1 ORIENTATION IN TAPE

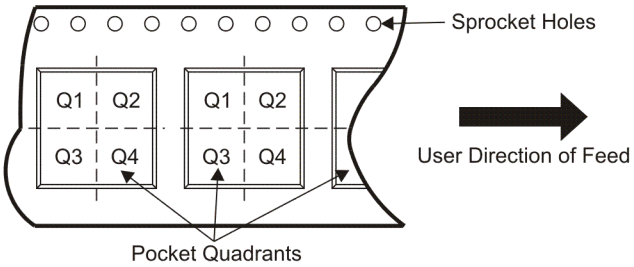

*All dimensions are nominal

Device	Package Type	Package Drawing	Pins	SPQ	Reel Diameter (mm)	Reel Width W1 (mm)	A0 (mm)	B0 (mm)	K0 (mm)	P1 (mm)	W (mm)	Pin1 Quadrant
TL026CDR	SOIC	D	8	2500	330.0	12.4	6.4	5.2	2.1	8.0	12.0	Q1
TL026CPSR	SO	PS	8	2000	330.0	16.4	8.2	6.6	2.5	12.0	16.0	Q1

TAPE AND REEL BOX DIMENSIONS

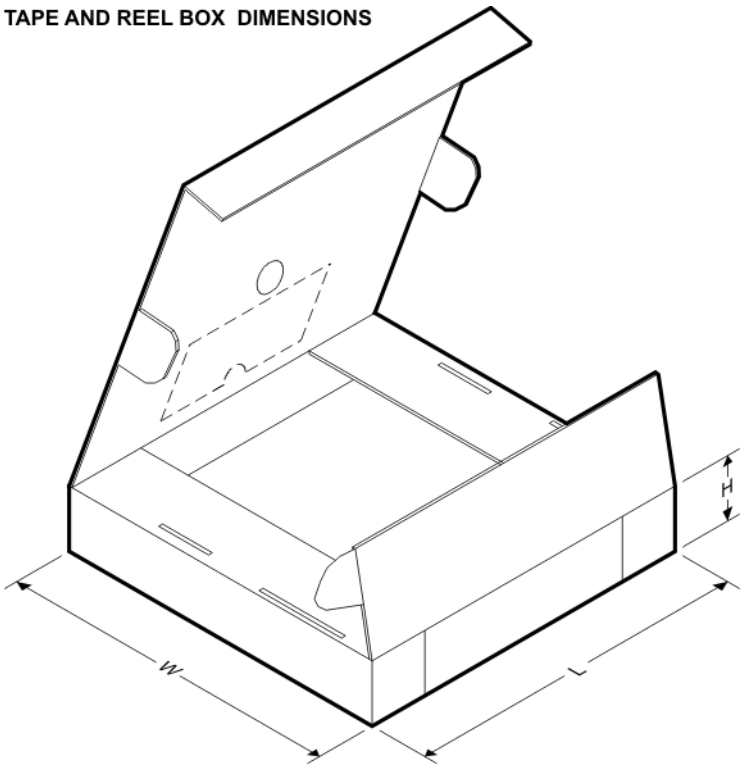

*All dimensions are nominal

Device	Package Type	Package Drawing	Pins	SPQ	Length (mm)	Width (mm)	Height (mm)
TL026CDR	SOIC	D	8	2500	340.5	338.1	20.6
TL026CPSR	SO	PS	8	2000	346.0	346.0	33.0

P (R–PDIP–T8) PLASTIC DUAL–IN–LINE PACKAGE

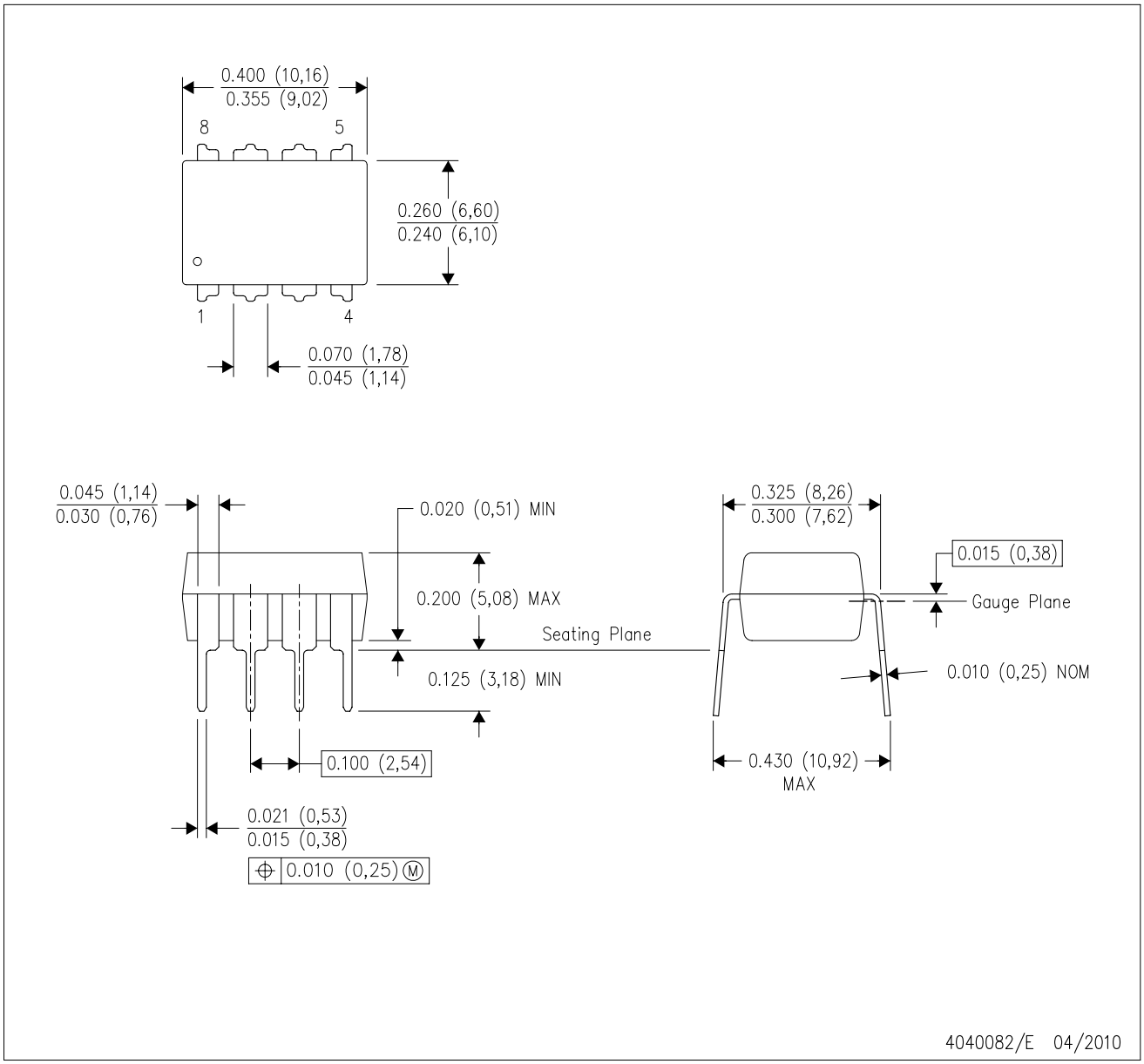

NOTES:
A. All linear dimensions are in inches (millimeters).
B. This drawing is subject to change without notice.
C. Falls within JEDEC MS–001 variation BA.

D (R–PDSO–G8) PLASTIC SMALL OUTLINE

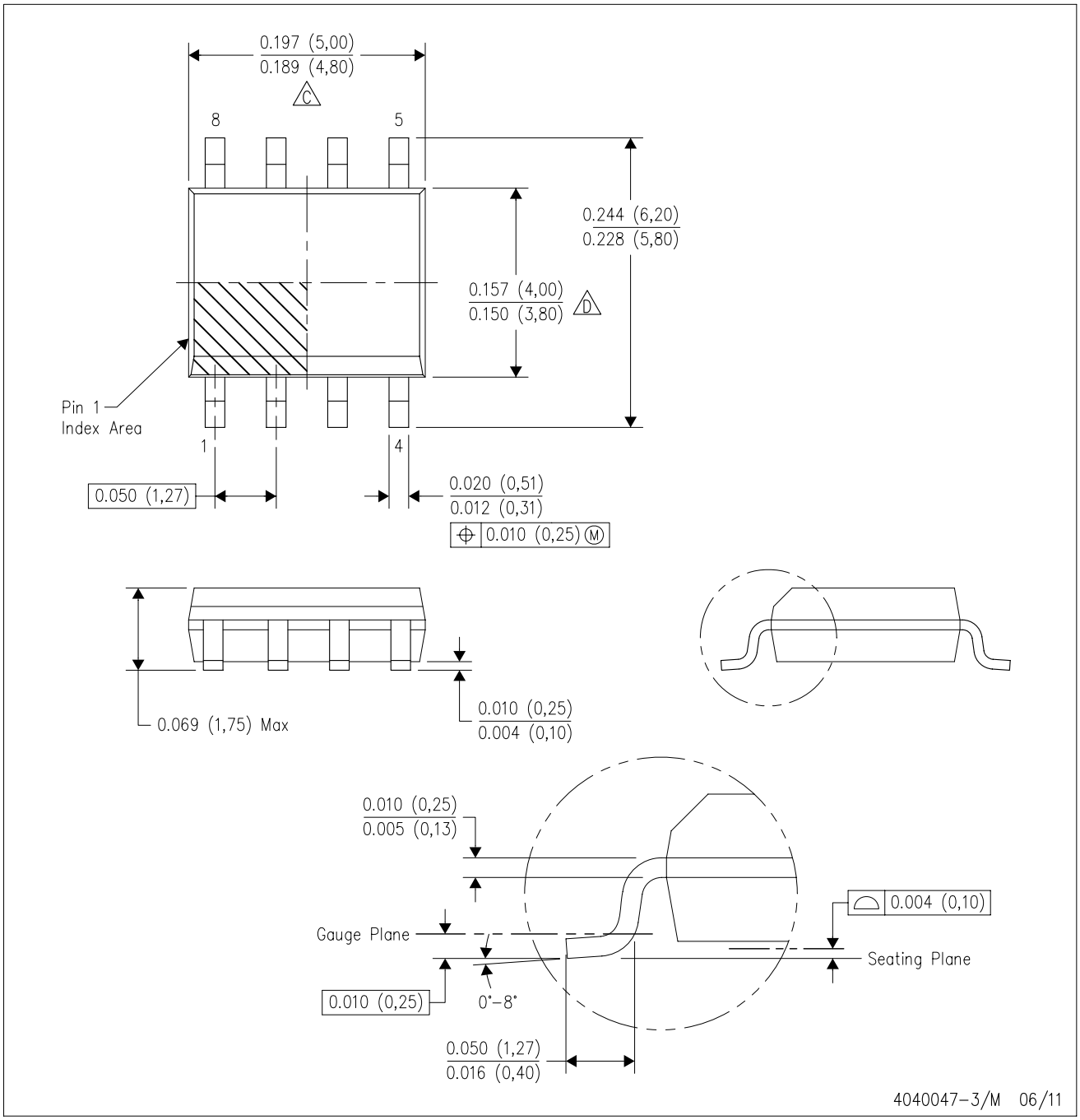

NOTES:
A. All linear dimensions are in inches (millimeters).
B. This drawing is subject to change without notice.
C. Body length does not include mold flash, protrusions, or gate burrs. Mold flash, protrusions, or gate burrs shall not exceed 0.006 (0,15) each side.
D. Body width does not include interlead flash. Interlead flash shall not exceed 0.017 (0,43) each side.
E. Reference JEDEC MS–012 variation AA.

D (R–PDSO–G8) PLASTIC SMALL OUTLINE

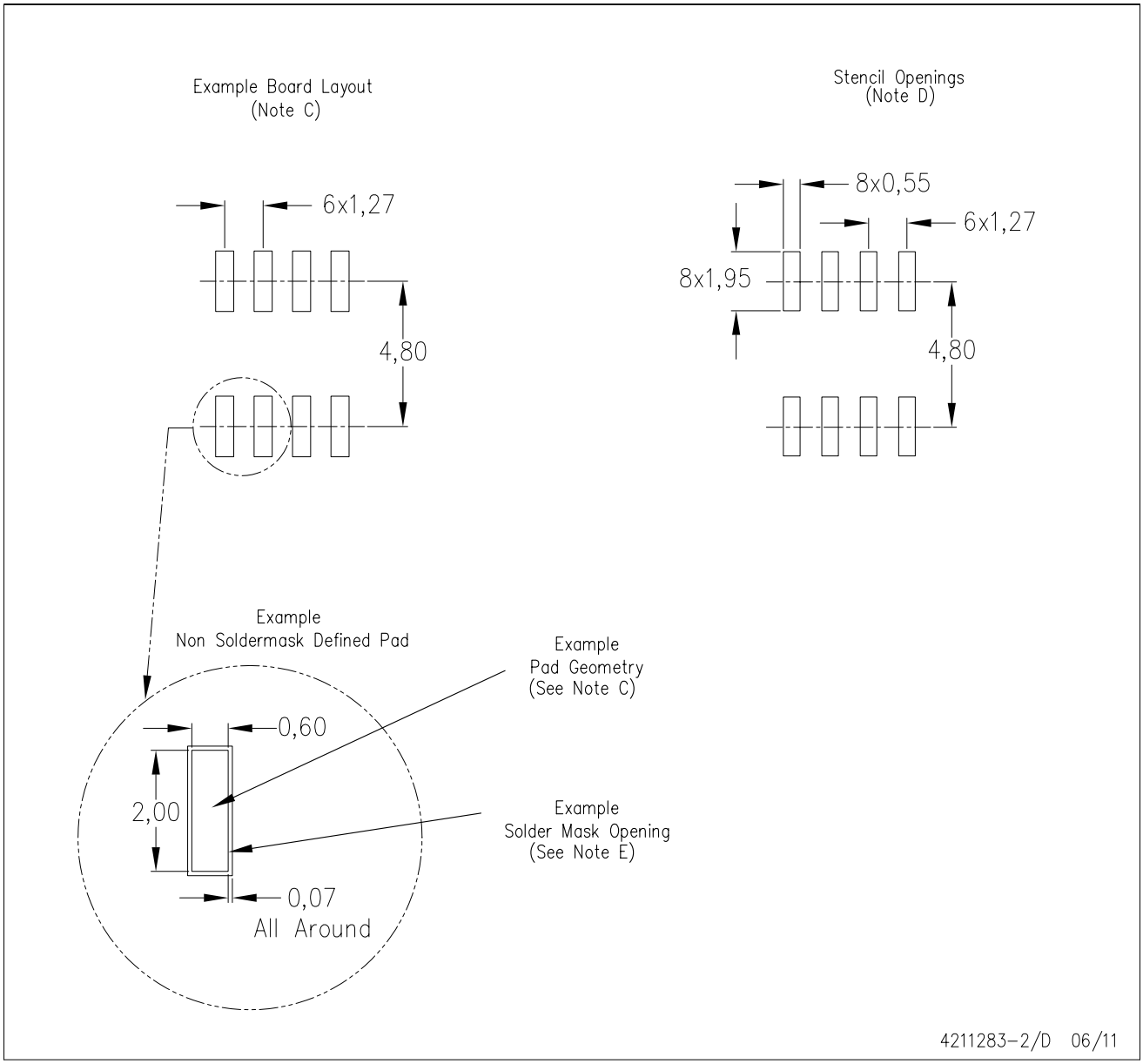

NOTES:
A. All linear dimensions are in millimeters.
B. This drawing is subject to change without notice.
C. Publication IPC–7351 is recommended for alternate designs.
D. Laser cutting apertures with trapezoidal walls and also rounding corners will offer better paste release. Customers should contact their board assembly site for stencil design recommendations. Refer to IPC–7525 for other stencil recommendations.
E. Customers should contact their board fabrication site for solder mask tolerances between and around signal pads.

MECHANICAL DATA

PS (R-PDSO-G8) **PLASTIC SMALL-OUTLINE PACKAGE**

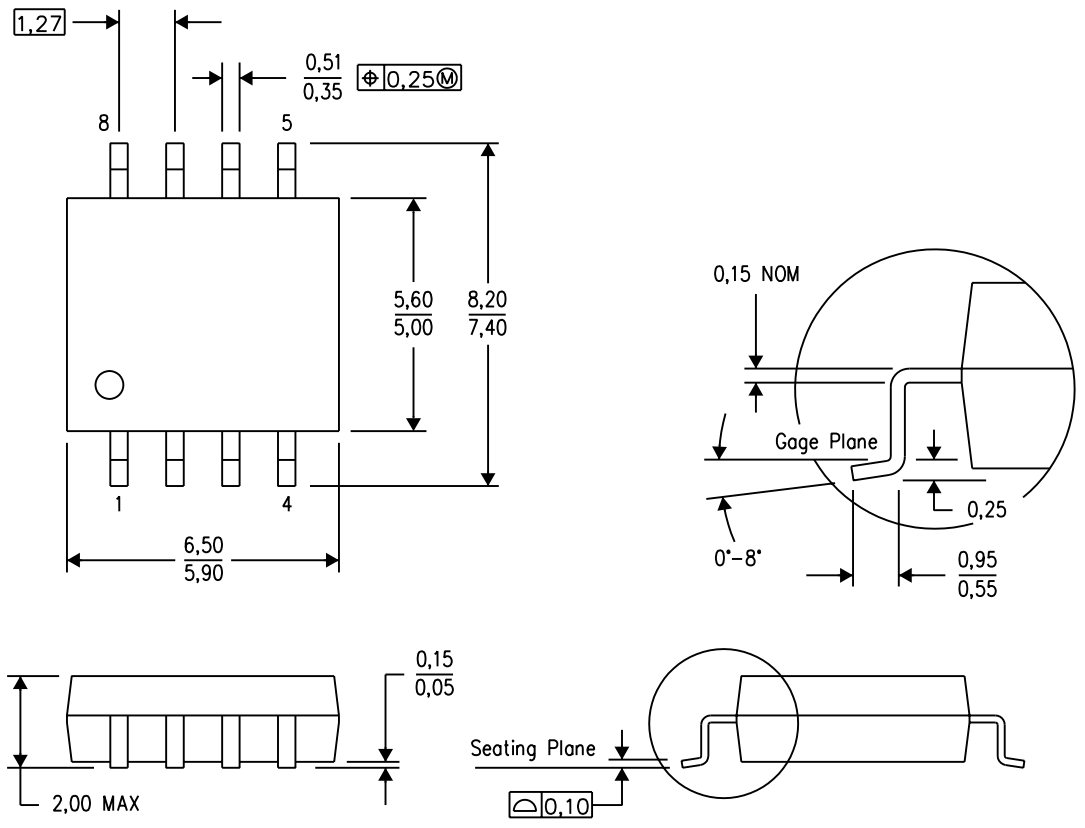

NOTES:
A. All linear dimensions are in millimeters.
B. This drawing is subject to change without notice.
C. Body dimensions do not include mold flash or protrusion, not to exceed 0,15.

IMPORTANT NOTICE

Texas Instruments Incorporated and its subsidiaries (TI) reserve the right to make corrections, modifications, enhancements, improvements, and other changes to its products and services at any time and to discontinue any product or service without notice. Customers should obtain the latest relevant information before placing orders and should verify that such information is current and complete. All products are sold subject to TI's terms and conditions of sale supplied at the time of order acknowledgment.

TI warrants performance of its hardware products to the specifications applicable at the time of sale in accordance with TI's standard warranty. Testing and other quality control techniques are used to the extent TI deems necessary to support this warranty. Except where mandated by government requirements, testing of all parameters of each product is not necessarily performed.

TI assumes no liability for applications assistance or customer product design. Customers are responsible for their products and applications using TI components. To minimize the risks associated with customer products and applications, customers should provide adequate design and operating safeguards.

TI does not warrant or represent that any license, either express or implied, is granted under any TI patent right, copyright, mask work right, or other TI intellectual property right relating to any combination, machine, or process in which TI products or services are used. Information published by TI regarding third-party products or services does not constitute a license from TI to use such products or services or a warranty or endorsement thereof. Use of such information may require a license from a third party under the patents or other intellectual property of the third party, or a license from TI under the patents or other intellectual property of TI.

Reproduction of TI information in TI data books or data sheets is permissible only if reproduction is without alteration and is accompanied by all associated warranties, conditions, limitations, and notices. Reproduction of this information with alteration is an unfair and deceptive business practice. TI is not responsible or liable for such altered documentation. Information of third parties may be subject to additional restrictions.

Resale of TI products or services with statements different from or beyond the parameters stated by TI for that product or service voids all express and any implied warranties for the associated TI product or service and is an unfair and deceptive business practice. TI is not responsible or liable for any such statements.

TI products are not authorized for use in safety-critical applications (such as life support) where a failure of the TI product would reasonably be expected to cause severe personal injury or death, unless officers of the parties have executed an agreement specifically governing such use. Buyers represent that they have all necessary expertise in the safety and regulatory ramifications of their applications, and acknowledge and agree that they are solely responsible for all legal, regulatory and safety-related requirements concerning their products and any use of TI products in such safety-critical applications, notwithstanding any applications-related information or support that may be provided by TI. Further, Buyers must fully indemnify TI and its representatives against any damages arising out of the use of TI products in such safety-critical applications.

TI products are neither designed nor intended for use in military/aerospace applications or environments unless the TI products are specifically designated by TI as military-grade or "enhanced plastic." Only products designated by TI as military-grade meet military specifications. Buyers acknowledge and agree that any such use of TI products which TI has not designated as military-grade is solely at the Buyer's risk, and that they are solely responsible for compliance with all legal and regulatory requirements in connection with such use.

TI products are neither designed nor intended for use in automotive applications or environments unless the specific TI products are designated by TI as compliant with ISO/TS 16949 requirements. Buyers acknowledge and agree that, if they use any non-designated products in automotive applications, TI will not be responsible for any failure to meet such requirements.

Following are URLs where you can obtain information on other Texas Instruments products and application solutions:

Products		**Applications**	
Audio	www.ti.com/audio	Communications and Telecom	www.ti.com/communications
Amplifiers	amplifier.ti.com	Computers and Peripherals	www.ti.com/computers
Data Converters	dataconverter.ti.com	Consumer Electronics	www.ti.com/consumer-apps
DLP® Products	www.dlp.com	Energy and Lighting	www.ti.com/energy
DSP	dsp.ti.com	Industrial	www.ti.com/industrial
Clocks and Timers	www.ti.com/clocks	Medical	www.ti.com/medical
Interface	interface.ti.com	Security	www.ti.com/security
Logic	logic.ti.com	Space, Avionics and Defense	www.ti.com/space-avionics-defense
Power Mgmt	power.ti.com	Transportation and Automotive	www.ti.com/automotive
Microcontrollers	microcontroller.ti.com	Video and Imaging	www.ti.com/video
RFID	www.ti-rfid.com	Wireless	www.ti.com/wireless-apps
RF/IF and ZigBee® Solutions	www.ti.com/lprf		

TI E2E Community Home Page e2e.ti.com

Mailing Address: Texas Instruments, Post Office Box 655303, Dallas, Texas 75265
Copyright © 2011, Texas Instruments Incorporated