TCA4311A Hot Swappable 2-Wire Bus Buffers

1 Features

- Operating Power-Supply Voltage Range of 2.7 V to 5.5 V
- Supports Bidirectional Data Transfer of I^2C Bus Signals
- SDA and SCL Lines are Buffered Which Increases Fanout
- 1-V Precharge on all SDA and SCL Lines Prevents Corruption During Live Board Insertion and Removal From Backplane
- SDA and SCL Input Lines are Isolated From Outputs
- Accommodates Standard Mode and Fast Mode I^2C Devices
- Improved Noise Immunity
- Applications Include Hot Board Insertion and Bus Extension
- Low I_{CC} Chip Disable of < 1 μA
- READY Open-Drain Output
- Supports Clock Stretching, Arbitration, and Synchronization
- Powered-Off High-Impedance I^2C Pins
- Open-Drain I^2C Pins
- Latch-Up Performance Exceeds 100 mA Per JESD 78, Class II
- ESD Protection Exceeds JESD 22
  - 8000-V Human-Body Model (A114-A)
  - 200-V Machine Model (A115-A)
  - 1000-V Charged-Device Model (C101)

2 Applications

- Servers
- Routers (Telecom Switching Equipment)
- Base Stations
- Industrial Automation

3 Description

The TCA4311A is a hot-swappable I^2C bus buffer that supports I/O card insertion into a live backplane without corruption of the data and clock busses. Control circuitry prevents the backplane from being connected to the card until a stop command or bus idle occurs on the backplane without bus contention on the card. When the connection is made, this device provides bidirectional buffering, keeping the backplane and card capacitances isolated. During insertion, the SDA and SCL lines are pre-charged to 1 V to minimize the current required to charge the parasitic capacitance of the chip.

When the I^2C bus is idle, the TCA4311A can be put into shutdown mode by setting the EN pin low. When EN is high, the TCA4311A resumes normal operation. It also includes an open drain READY output pin, which indicates that the backplane and card sides are connected together. When READY is high, the SDAIN and SCLIN are connected to SDAOUT and SCLOUT. When the two sides are disconnected, READY is low.

Both the backplane and card may be powered with supply voltages ranging from 2.7 V to 5.5 V, with no restrictions on which supply voltage is higher.

The TCA4311A has standard open-drain I/Os. The size of the pull-up resistors to the I/Os depends on the system, but each side of this buffer must have a pull-up resistor. The device is designed to work with Standard Mode and Fast Mode I^2C devices in addition to SMBus devices. Standard Mode I^2C devices only specify 3 mA in a generic I^2C system where Standard Mode devices and multiple masters are possible. Under certain conditions, high termination currents can be used.

Device Information(1)

PART NUMBER	PACKAGE	BODY SIZE (NOM)
TCA4311A	SOIC (8)	4.90 mm × 3.91 mm
	VSSOP (8)	3.00 mm × 3.00 mm

(1) For all available packages, see the orderable addendum at the end of the datasheet.

4 Simplified Schematic

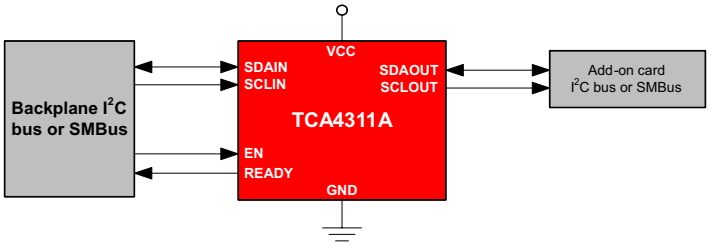

An IMPORTANT NOTICE at the end of this data sheet addresses availability, warranty, changes, use in safety-critical applications, intellectual property matters and other important disclaimers. PRODUCTION DATA.

Table of Contents

1 Features ... 1
2 Applications ... 1
3 Description ... 1
4 Simplified Schematic ... 1
5 Revision History ... 2
6 Pin Configuration and Functions ... 3
7 Specifications ... 3
7.1 Absolute Maximum Ratings ... 3
7.2 Handling Ratings ... 3
7.3 Recommended Operating Conditions ... 4
7.4 Thermal Information ... 4
7.5 Electrical Characteristics ... 5
7.6 Typical Characteristics ... 6
8 Parameter Measurement Information ... 6
9 Detailed Description ... 8
9.1 Functional Block Diagram ... 8
9.2 Feature Description ... 9
9.3 Device Functional Modes ... 9
10 Application and Implementation ... 11
10.1 Application Information ... 11
10.2 Typical Application ... 11
11 Power Supply Recommendations ... 17
12 Layout ... 17
12.1 Layout Guidelines ... 17
12.2 Layout Example ... 18
13 Device and Documentation Support ... 19
13.1 Trademarks ... 19
13.2 Electrostatic Discharge Caution ... 19
13.3 Glossary ... 19
14 Mechanical, Packaging, and Orderable Information ... 19

5 Revision History

Changes from Revision A (July 2012) to Revision B	Page
• Handling Rating table, Feature Description section, Device Functional Modes, Application and Implementation section, Power Supply Recommendations section, Layout section, Device and Documentation Support section, and Mechanical, Packaging, and Orderable Information section.	1
• Changed the TCA4311A RTA Specification.	1

Changes from Original (January 2011) to Revision A	Page
• Updated Input-output Offset Voltage vs Pullup Resistor graphic.	6

Copyright © 2011–2014, Texas Instruments Incorporated

6 Pin Configuration and Functions

D OR DGK PACKAGES
(TOP VIEW)

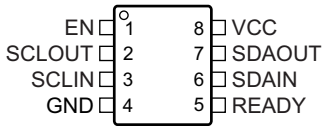

Pin Functions

PIN		DESCRIPTION
NAME	NUMBER	
EN	1	Active-high chip enable pin. If EN is low, the TCA4311A is in a low current (<1 µA) mode. It also disables the rise-time accelerators, disables the bus pre-charge circuitry, drives READY low, isolates SDAIN from SDAOUT and isolates SCLIN from SCLOUT. EN should be high (at V_{CC}) for normal operation. Connect EN to V_{CC} if this feature is not being used.
SCLOUT	2	Serial clock output. Connect this pin to the SCL bus on the card.
SCLIN	3	Serial clock input. Connect this pin to the SCL bus on the backplane.
GND	4	Supply ground
READY	5	Connection flag/rise-time accelerator control. READY is low when either EN is low or the start-up sequence described in the operation section has not been completed. READY goes high when EN is high and start-up is complete. Connect a 10-kΩ resistor from this pin to V_{CC} to provide the pull up.
SDAIN	6	Serial data input. Connect this pin to the SDA bus on the backplane.
SDAOUT	7	Serial data output. Connect this pin to the SDA bus on the card.
VCC	8	Supply power. Main input power supply from backplane. This is the supply voltage for the devices on the backplane I^2C busses. Connect pull-up resistors from SDAIN and SCLIN (and also from SDAOUT and SCLOUT) to this pin. Place a bypass capacitor of at least 0.01 µF close to this pin for best results.

7 Specifications

7.1 Absolute Maximum Ratings(1)

over operating free-air temperature range (unless otherwise noted)

			MIN	MAX	UNIT
V_{CC}	Supply voltage range		–0.5	7	V
$V_{I/O}$	I^2C bus voltage range(2)	SDAIN, SCLIN, SDAOUT, SCLOUT	–0.5	7	V
V_I	Input voltage range(2)	EN	–0.5	7	V
I_{IK}	Input clamp current	$V_I < 0$		–50	mA
I_{OK}	Output clamp current	$V_O < 0$		–50	mA
I_O	Continuous output current			±50	mA
I_{CC}	Continuous current through V_{CC} or GND			±100	mA

(1) Stresses beyond those listed under "absolute maximum ratings" may cause permanent damage to the device. These are stress ratings only, and functional operation of the device at these or any other conditions beyond those indicated under "recommended operating conditions" is not implied. Exposure to absolute-maximum-rated conditions for extended periods may affect device reliability.
(2) The input negative-voltage and output voltage ratings may be exceeded if the input and output current ratings are observed.

7.2 Handling Ratings

			MIN	MAX	UNIT
T_{stg}	Storage temperature range		–65	150	°C
$V_{(ESD)}$	Electrostatic discharge	Human body model (HBM), per ANSI/ESDA/JEDEC JS-001, all pins(1)	0	8000	V
		Charged device model (CDM), per JEDEC specification JESD22-C101, all pins(2)	0	1000	

(1) JEDEC document JEP155 states that 500-V HBM allows safe manufacturing with a standard ESD control process.
(2) JEDEC document JEP157 states that 250-V CDM allows safe manufacturing with a standard ESD control process.

Copyright © 2011–2014, Texas Instruments Incorporated

7.3 Recommended Operating Conditions

			MIN	MAX	UNIT
V_{CC}	Supply voltage		2.7	5.5	V
V_{IH}	High-level input voltage	EN input	2	5.5	V
V_{IL}	Low-level input voltage	SDA and SCL inputs (1)	–0.5	0.4	V
		EN input	–0.5	0.8	
I_{OL}	Low-level output current	V_{CC} = 3 V		3	mA
		V_{CC} = 4.5 V		3	
T_A	Operating free-air temperature		–40	85	°C

(1) In certain circumstances, devices must be able to drive the input voltage low while sinking current from the rise time accelerators of the TCA4311A (see $I_{PULLUPAC}$ in *Electrical Characteristics*).

7.4 Thermal Information

THERMAL METRIC (1)		TCA4311A		UNIT
		D	DGK	
		8 PINS		
$R_{\theta JA}$	Junction-to-ambient thermal resistance	109.2	158.6	°C/W
$R_{\theta JC(top)}$	Junction-to-case (top) thermal resistance	53.5	52.8	
$R_{\theta JB}$	Junction-to-board thermal resistance	49.7	78.2	
ψ_{JT}	Junction-to-top characterization parameter	8.8	5.1	
ψ_{JB}	Junction-to-board characterization parameter	49.2	76.9	

(1) For more information about traditional and new thermal metrics, see the *IC Package Thermal Metrics* application report, SPRA953.

Copyright © 2011–2014, Texas Instruments Incorporated

7.5 Electrical Characteristics

over operating free-air temperature range (unless otherwise noted)

PARAMETER		TEST CONDITIONS	MIN	TYP	MAX	UNIT
Power Supply						
V_{CC}	Positive supply voltage		2.7		5.5	V
I_{CC}	Supply current	V_{CC} = 5.5 V, V_{SDAIN} = V_{SCLIN} = 0 V		5.1	7	mA
I_{SD}	Supply current in shutdown mode	V_{EN} = 0 V		0.1		µA
Start-Up Circuitry						
V_{PRE}	Pre-charge voltage	SDA, SCL floating	0.8	1	1.2	V
t_{IDLE}	Bus idle time		50	95	150	µs
V_{EN}	EN threshold voltage			0.5 × V_{CC}	0.9 × V_{CC}	V
V_{DIS}	Disable threshold voltage	EN Pin	0.1 × V_{CC}	0.5 × V_{CC}		V
I_{EN}	EN input current	EN from 0 V to V_{CC}		±0.1	±1	µA
t_{EN}	Enable time			95		µs
t_{DIS}	Disable time (EN to READY)			30		ns
t_{STOP}	SDAIN to READY delay after STOP			1.2		µs
t_{READY}	SCLOUT/SDAOUT to READY			0.8		µs
I_{OFF}	READY OFF state leakage current			±0.1		µA
V_{OL}	READY output low voltage	I_{PULLUP} = 3 mA			0.4	V
Rise-Time Accelerators						
$I_{PULLUPAC}$	Transient boosted pull-up current	Positive transition on SDA, SCL, V_{CC} = 2.7 V,	1	8		mA
Input-Output Connection						
V_{OS}	Input-output offset voltage	10 kΩ to V_{CC} on SDA, SCL, V_{CC} = 3.3 V,(1)	0	100	175	mV
C_{IN}	Digital input capacitance				10	pF
V_{OL}	Output low voltage, input = 0 V	SDA, SCL pins, I_{SINK} = 3 mA,	0		0.4	V
I_I	Input leakage current	SDA, SCL pins = V_{CC} = 5.5 V			±5	µA

(1) The connection circuitry always regulates its output to a higher voltage than its input. The magnitude of this offset voltage as a function of the pull-up resistor and V_{CC} voltage is shown in the *Typical Characteristics* section.

7.6 Typical Characteristics

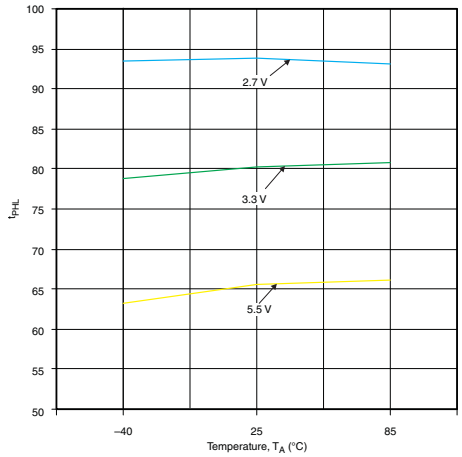

Figure 1. Input-Output t_{PLH} vs Temperature

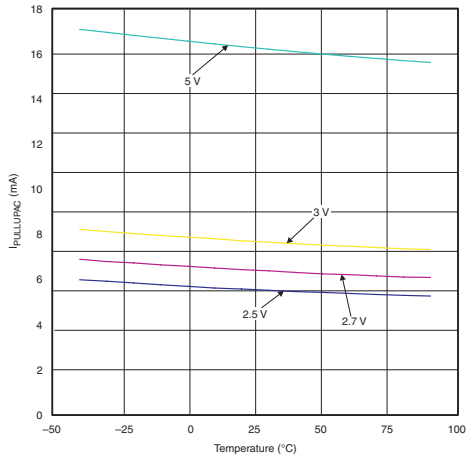

Figure 2. $I_{PULLUPAC}$ vs Temperature

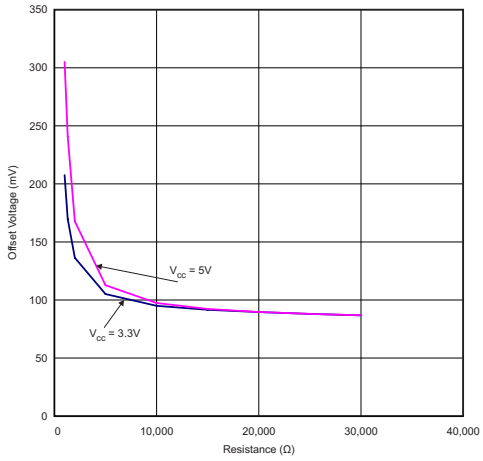

Figure 3. Input-output Offset Voltage vs Pull-Up Resistor

8 Parameter Measurement Information

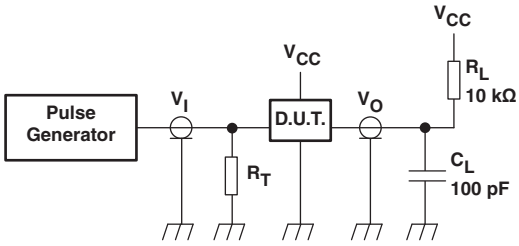

R_L = Load resistor

C_L = Load capacitance includes jig and probe capacitance

R_T = Termination resistance should be equal to the output impedance Z_0 of the pulse generators.

Figure 4. Test Circuitry for Switching Times

Copyright © 2011–2014, Texas Instruments Incorporated

Parameter Measurement Information (continued)

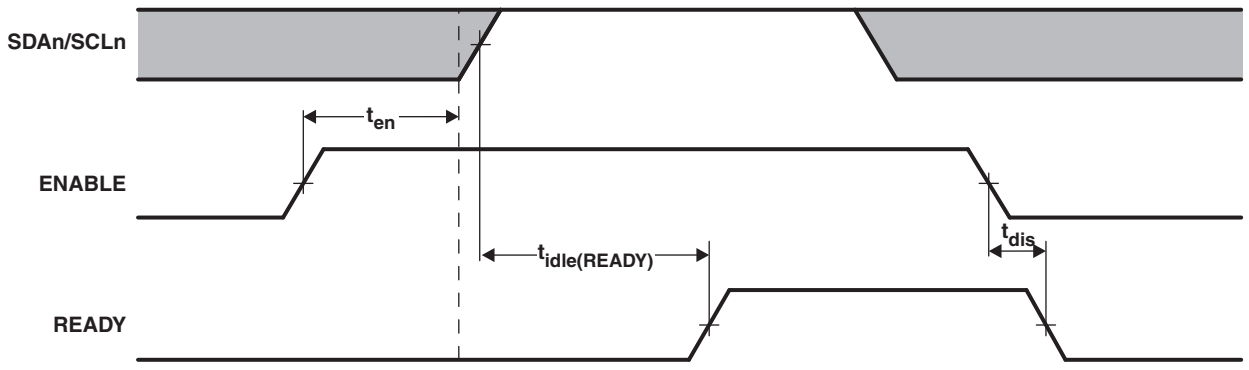

Figure 5. Timing for t_{en}, $t_{idle(READY)}$, and t_{dis}

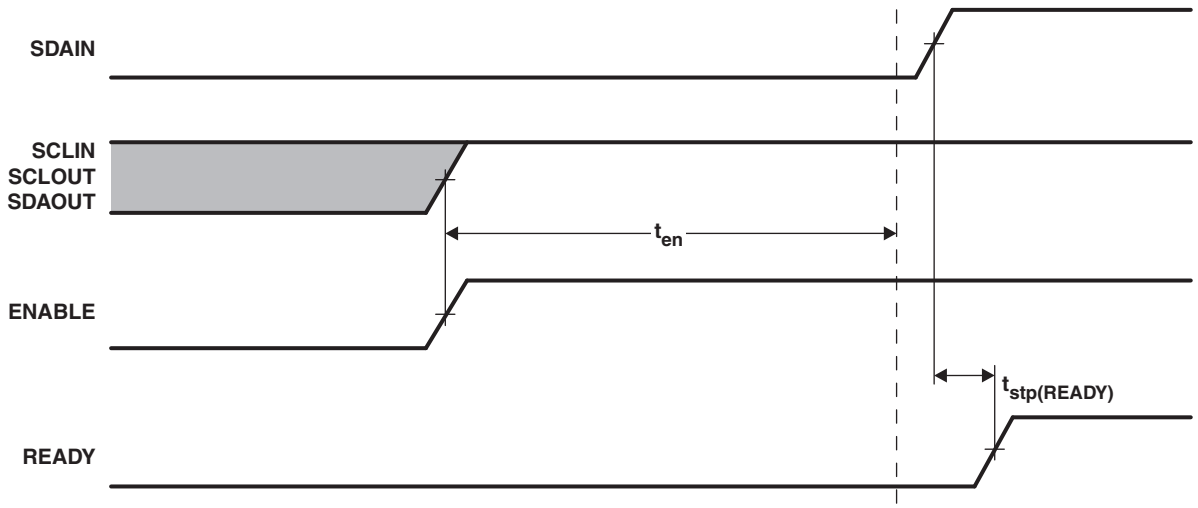

Figure 6. $t_{stp(READY)}$ That Can Occur After t_{en}

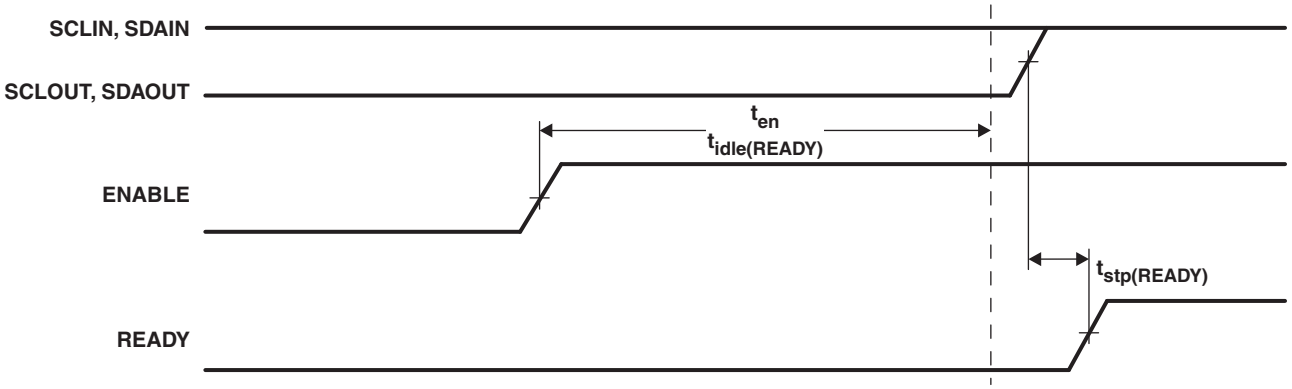

Figure 7. $t_{stp(READY)}$ That Can Occur After t_{en} and $t_{idle(READY)}$

9 Detailed Description

The TCA4311A is a bidirectional I^{2}C buffer optimized for hot-swap applications. The device supports I/O card insertion into a live backplane operating in Standard-Mode (100 kHz) or Fast-Mode (400 kHz). Initially, there is no connection between SCLIN and SCLOUT or between SDAIN and SDAOUT. Upon connection, the TCA4311A provides bidirectional buffering, keeping the card and backplane capacitances isolated from each other.

A pre-charge voltage on all SCL and SDA pins prevents the TCA4311A from disrupting I^{2}C bus communication during insertion. Bus idle detection determines that there is no communication on the I^{2}C line when the connection from –IN to –OUT is made. Once the connection is made, the READY pin will output a logic high signal. If the I^{2}C bus will be inactive for extended periods of time, the TCA4311A can be put in shutdown mode by setting the EN pin to a logic low state. The TCA4311A resumes normal operation when EN is in a logic high state.

As with all I^{2}C buffers, the TCA4311A requires pull-up resistors on all SCL and SDA pins due to the open-drain output circuitry. However, the integration of rise time accelerators allowed the use of weaker pull-up resistors than would normally be required.

9.1 Functional Block Diagram

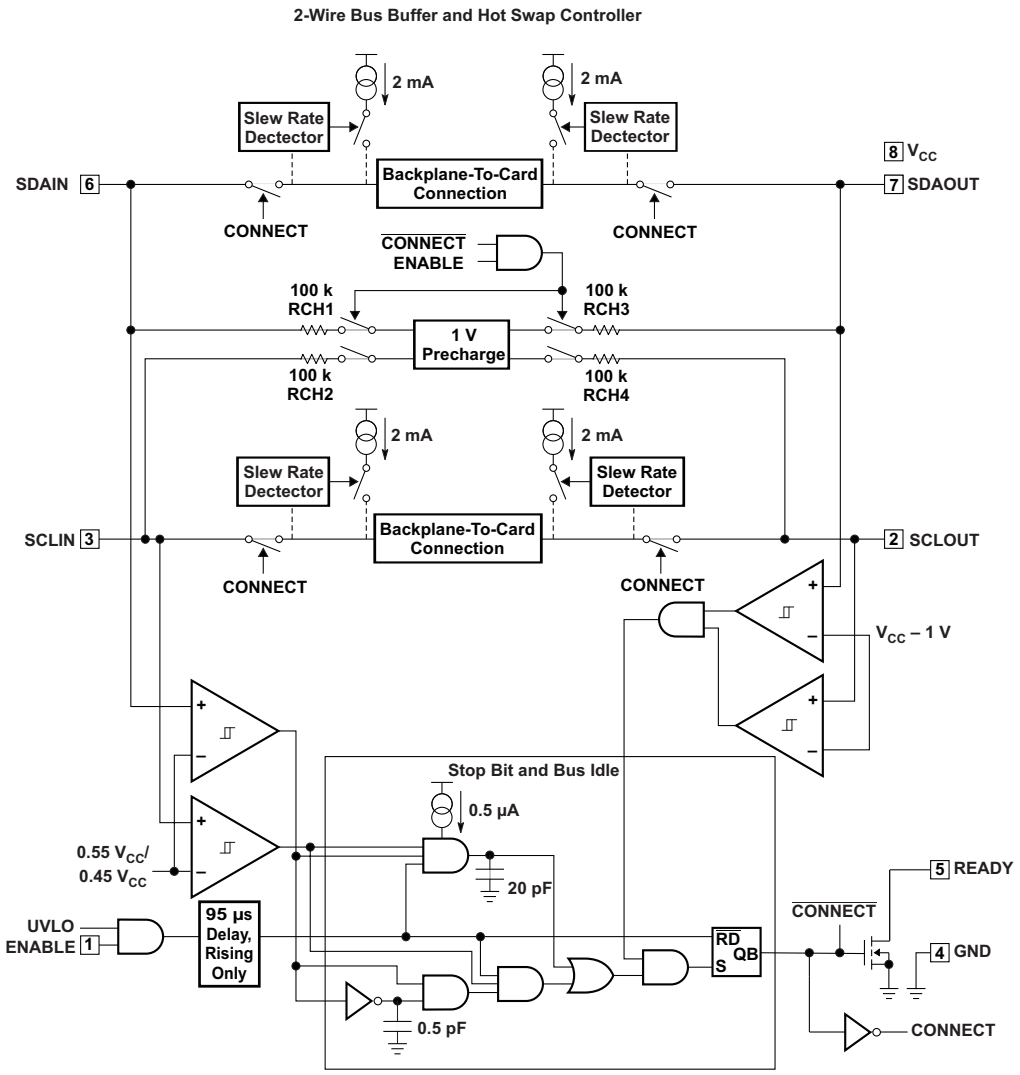

Copyright © 2011–2014, Texas Instruments Incorporated

9.2 Feature Description

9.2.1 Rise-Time Accelerators

Once connection has been established, rise-time accelerator circuits on all four SDA and SCL pins are activated. These allow the user to choose weaker DC pull-up currents on the bus, reducing power consumption while still meeting system rise-time requirements. During positive bus transitions, the TCA4311A switches in 2 mA (typical) of current to quickly slew the SDA and SCL lines once their DC voltages exceed 0.6 V. Using a general rule of 20 pF of capacitance for every device on the bus (10 pF for the device and 10 pF for interconnect), choose a pull-up current so that the bus will rise on its own at a rate of at least 1.25 V/µs to guarantee activation of the accelerators.

For example, assume an SMBus system with V_{CC} = 3 V, a 10-kΩ pull-up resistor and equivalent bus capacitance of 200 pF. The rise-time of an SMBus system is calculated from ($V_{IL(MAX)}$ – 0.15 V) to ($V_{IH(MIN)}$ + 0.15 V), or 0.65 V to 2.25 V. It takes an RC circuit 0.92 time constants to traverse this voltage for a 3 V supply; in this case, 0.92 × (10 kΩ × 200 pF) = 1.84 µs. Thus, the system exceeds the maximum allowed rise-time of 1 µs by 84%. However, using the rise-time accelerators, which are activated at a DC threshold of below 0.65 V, the worst-case rise-time is: (2.25 V – 0.65 V) × 200 pF/1 mA = 320 ns, which meets the 1 µs rise-time requirement.

9.2.2 READY Digital Output

This pin provides a digital flag which is low when either EN is low or the start-up sequence described earlier in this section has not been completed. READY goes high when EN is high and start-up is complete. The pin is driven by an open drain pull-down capable of sinking 3 mA while holding 0.4 V on the pin. Connect a resistor of 10 kΩ to V_{CC} to provide the pull-up.

9.2.3 EN Low Current Disable

Grounding the EN pin disconnects the backplane side from the card side, disables the rise-time accelerators, drives READY low, disables the bus pre-charge circuitry and puts the part in a near-zero current state. When the pin voltage is driven all the way to V_{CC}, the part waits for data transactions on both the backplane and card sides to be complete (as described in the Start-Up section) before reconnecting the two sides.

9.3 Device Functional Modes

9.3.1 Start-Up

When the TCA4311A first receives power on its V_{CC} pin, either during power-up or during live insertion, it starts in an undervoltage lockout (UVLO) state, ignoring any activity on the SDA and SCL pins until V_{CC} rises above 2.5 V.

During this time, the 1 V pre-charge circuitry is also active and forces 1 V through 100-kΩ nominal resistors to the SDA and SCL pins. Because the I/O card is being plugged into a live backplane, the voltage on the backplane SDA and SCL busses may be anywhere between 0 V and V_{CC}. Pre-charging the SCL and SDA pins to 1 V minimizes the worst-case voltage differential these pins will see at the moment of connection, therefore minimizing the amount of disturbance caused by the I/O card.

Once the TCA4311A comes out of UVLO, it assumes that SDAIN and SCLIN have been inserted into a live system and that SDAOUT and SCLOUT are being powered up at the same time as itself. Therefore, it looks for either a stop bit or bus idle condition on the backplane side to indicate the completion of a data transaction. When either one occurs, the part also verifies that both the SDAOUT and SCLOUT voltages are high. When all of these conditions are met, the input-to-output connection circuitry is activated, joining the SDA and SCL busses on the I/O card with those on the backplane, and the rise time accelerators are enabled.

Copyright © 2011–2014, Texas Instruments Incorporated

Device Functional Modes (continued)

9.3.2 Connection Circuitry

Once the connection circuitry is activated, the functionality of the SDAIN and SDAOUT pins is identical. A low forced on either pin at any time results in both pin voltages being low. For proper operation, logic low input voltages should be no higher than 0.4 V with respect to the ground pin voltage of the TCA4311A. SDAIN and SDAOUT enter a logic high state only when all devices on both SDAIN and SDAOUT release high. The same is true for SCLIN and SCLOUT. This important feature ensures that clock stretching, clock synchronization, arbitration and the acknowledge protocol always work, regardless of how the devices in the system are tied to the TCA4311A.

Another key feature of the connection circuitry is that it provides bidirectional buffering, keeping the backplane and card capacitances isolated. Because of this isolation, the waveforms on the backplane busses look slightly different than the corresponding card bus waveforms, as described here.

Copyright © 2011–2014, Texas Instruments Incorporated

10 Application and Implementation

NOTE

Information in the following applications sections is not part of the TI component specification, and TI does not warrant its accuracy or completeness. TI's customers are responsible for determining suitability of components for their purposes. Customers should validate and test their design implementation to confirm system functionality.

10.1 Application Information

The TCA4311A was designed for applications in which a portion of a communication bus contained on an I/O card or add-on card, is inserted into a live backplane where the main communication bus is already active, which is known as hot-swapping. The two types of communication buses supported by the TCA4311A are I^2C and SMBus. System management for PCI cards is an application of the SMBus protocol, which adds on to the electrical specifications and hardware addressing protocol of I^2C with second-level software for building special systems that may include dynamic addressing. The following application schematics and descriptions give examples of a typical application of the TCA4311A (Figure 8), a CompactPCI™ system configuration (Figure 11), a PCI system configuration (Figure 12), repeater or bus-extender application (Figure 13), and a system with disparate voltage supplies (Figure 14).

10.2 Typical Application

10.2.1 General Application

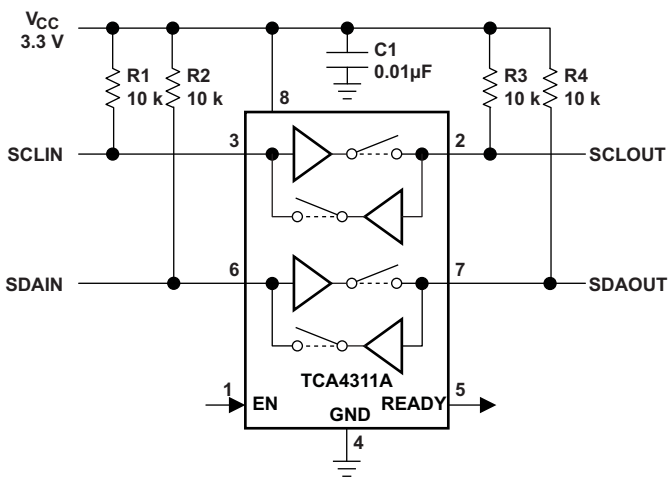

Figure 8. Application Schematic

10.2.1.1 Design Requirements

10.2.1.1.1 Input to Output Offset Voltage

When a logic low voltage, V_{LOW1}, is driven on any of the TCA4311A's data or clock pins, the TCA4311A regulates the voltage on the other side of the chip (call it V_{LOW2}) to a slightly higher voltage, as directed by the following equation:

$$V_{LOW2} = V_{LOW1} + 75\ \text{mV} + (V_{CC}/R) \times 100 \quad (1)$$

where R is the bus pull-up resistance in ohms (Ω). For example, if a device is forcing SDAOUT to 10 mV where V_{CC} = 3.3 V and the pull-up resistor R on SDAIN is 10 kΩ, then the voltage on SDAIN = 10 + 75 + (3.3/10000) × 100 = 118 mV. See the *Typical Characteristics* section for curves showing the offset voltage as a function of V_{CC} and R.

Typical Application (continued)

10.2.1.1.2 Propagation Delays

During a rising edge, the rise-time on each side is determined by the combined pull-up current of the TCA4311A boost current and the bus resistor and the equivalent capacitance on the line. If the pull-up currents are the same, a difference in rise-time occurs which is directly proportional to the difference in capacitance between the two sides. This effect is displayed in Figure 9 for V_{CC} = 3.3 V and a 10-kΩ pull-up resistor on each side (50 pF on one side and 150 pF on the other). Since the output side has less capacitance than the input, it rises faster and the effective t_{PLH} is negative.

There is a finite propagation delay, t_{PHL}, through the connection circuitry for falling waveforms. Figure 10 shows the falling edge waveforms for the same V_{CC}, pull-up resistors and equivalent capacitance conditions as used in Figure 9. An external NMOS device pulls down the voltage on the side with 150 pF capacitance; the TCA4311A pulls down the voltage on the opposite side, with a delay of 55 ns. This delay is always positive and is a function of supply voltage, temperature and the pull-up resistors and equivalent bus capacitances on both sides of the bus. The *Typical Characteristics* section shows t_{PHL} as a function of temperature and voltage for 10-kΩ pull-up resistors and 100 pF equivalent capacitance on both sides of the part. By comparison with Figure 10, the V_{CC} = 3.3 V curve shows that increasing the capacitance from 50 pF to 100 pF results in a t_{PHL} increase from 55 ns to 75 ns. Larger output capacitances translate to longer delays (up to 150 ns). Users must quantify the difference in propagation times for a rising edge versus a falling edge in their systems and adjust setup and hold times accordingly.

10.2.1.2 Detailed Design Procedure

10.2.1.2.1 Resistor Pull-Up Value Selection

The system pull-up resistors must be strong enough to provide a positive slew rate of 1.25 V/µs on the SDA and SCL pins, in order to activate the boost pull-up currents during rising edges. Choose maximum resistor value R using the formula:

$$R \le (V_{CC(MIN)} - 0.6)\ (800{,}000) / C \quad (2)$$

where R is the pull-up resistor value in ohms, $V_{CC(MIN)}$ is the minimum V_{CC} voltage and C is the equivalent bus capacitance in picofarads (pF).

In addition, regardless of the bus capacitance, always choose R ≤ 16 kΩ for V_{CC} = 5.5 V maximum, R ≤ 24 kΩ for V_{CC} = 3.6 V maximum. The start-up circuitry requires logic high voltages on SDAOUT and SCLOUT to connect the backplane to the card, and these pull-up values are needed to overcome the pre-charge voltage.

10.2.1.3 Application Curves

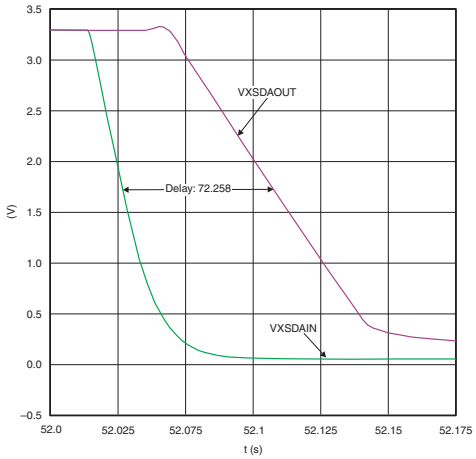

Figure 9. Input-Output Connection t_{PLH}

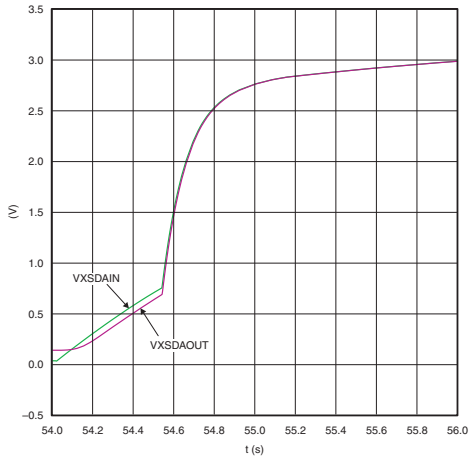

Figure 10. Input-Output Connection t_{PHL}

Copyright © 2011–2014, Texas Instruments Incorporated

Typical Application (continued)

10.2.2 Live Insertion and Capacitance Buffering CompactPCI™ Application

Figure 11 through Figure 12 illustrate the usage of the TCA4311A in applications that take advantage of both its hot swap controlling and capacitance buffering features. In all of these applications, note that if the I/O cards were plugged directly into the backplane, all of the backplane and card capacitances would add directly together, making rise- and fall-time requirements difficult to meet. Placing a TCA4311A on the edge of each card, however, isolates the card capacitance from the backplane. For a given I/O card, the TCA4311A drives the capacitance of everything on the card and the backplane must drive only the capacitance of the TCA4311A, which is less than 10 pF.

Figure 11 shows the TCA4311A in a CompactPCI™ configuration. Connect V_{CC} and EN to the output of one of the CompactPCI™ power supply Hot Swap circuits. Use a pull-up resistor to EN for a card side enable/disable.

V_{CC} is monitored by a filtered UVLO circuit. With the V_{CC} voltage powering up after all other pins have established connection, the UVLO circuit ensures that the backplane and card data and clock busses are not connected until the transients associated with live insertion have settled. Owing to their small capacitance, the SDAIN and SCLIN pins cause minimal disturbance on the backplane busses when they make contact with the connector.

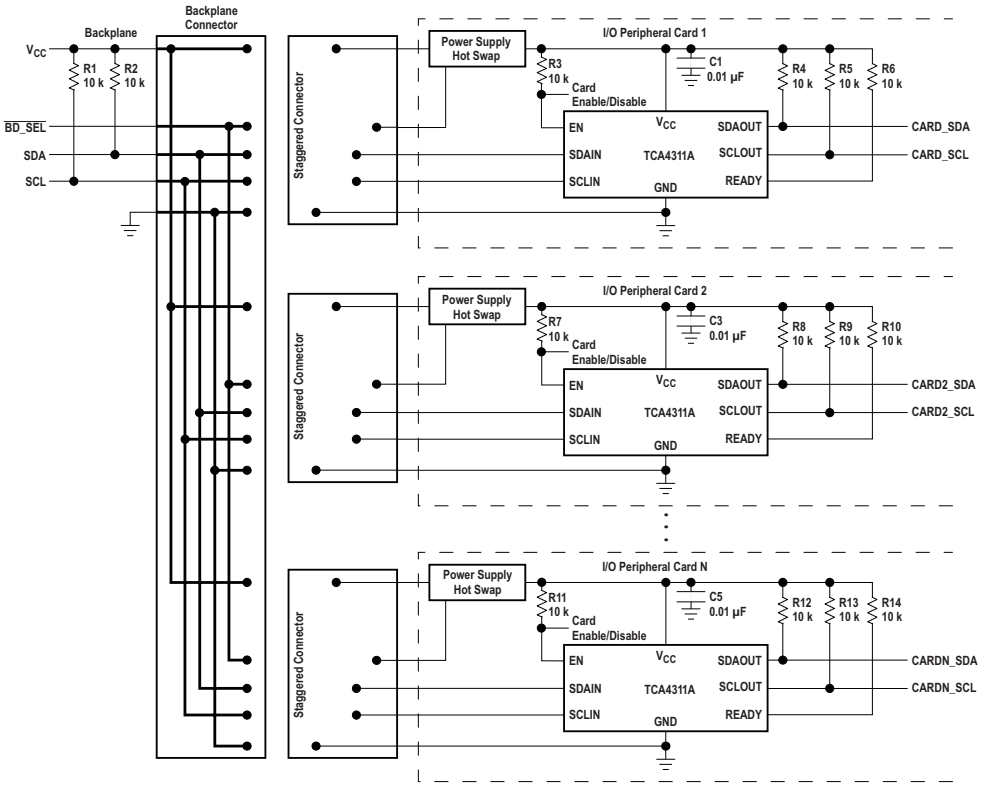

Figure 11. Inserting Multiple I/O Cards into a Live Backplane Using the TCA4311A in a CompactPCI System

10.2.2.1 Design Requirements

Refer to *Design Requirements*.

10.2.2.2 Detailed Design Procedure

Refer to *Detailed Design Procedure*.

10.2.2.3 Application Curves

Refer to *Application Curves*.

Typical Application (continued)

10.2.3 Live Insertion and Capacitance Buffering PCI Application

Figure 12 shows the TCA4311A in a PCI application, where all of the pins have the same length. In this case, connect an RC series circuit on the I/O card between V_{CC} and EN. An RC product of 10 ms provides a filter to prevent the TCA4311A from becoming activated until the transients associated with live insertion have settled.

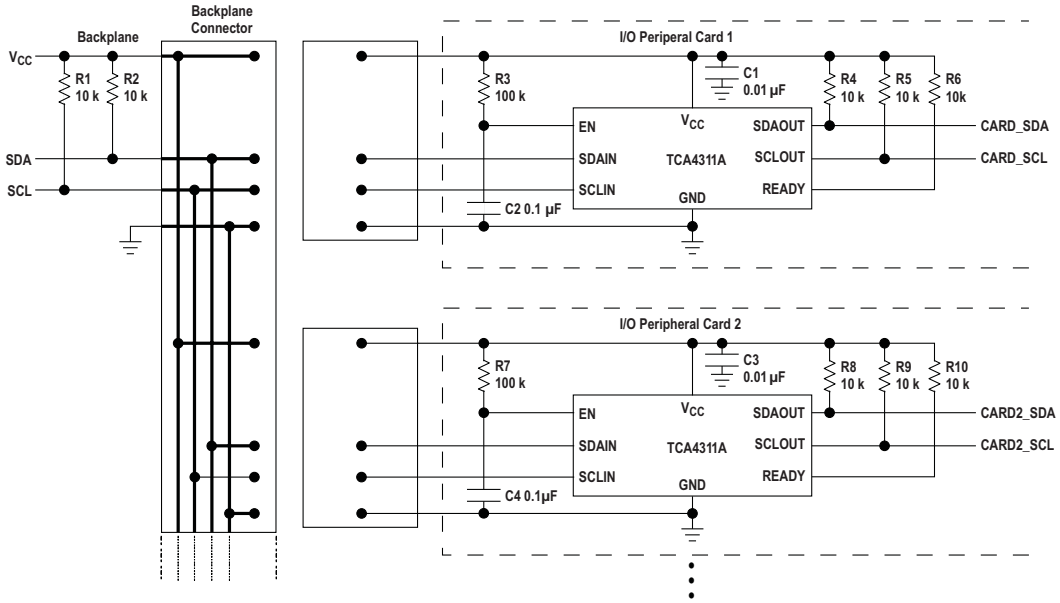

Figure 12. Inserting Multiple I/O Cards into a Live Backplane Using the TCA4311A in a PCI System Schematic

10.2.3.1 Design Requirements

Refer to *Design Requirements*.

10.2.3.2 Detailed Design Procedure

Refer to *Detailed Design Procedure*.

10.2.3.3 Application Curves

Refer to *Application Curves*.

Copyright © 2011–2014, Texas Instruments Incorporated

Typical Application (continued)

10.2.4 Repeater/Bus Extender Application

Users who wish to connect two 2-wire systems separated by a distance can do so by connecting two TCA4311A back-to-back, as shown in Figure 13. The I^2C specification allows for 400 pF maximum bus capacitance, severely limiting the length of the bus. The SMBus specification places no restriction on bus capacitance, but the limited impedances of devices connected to the bus require systems to remain small if rise- and fall-time specifications are to be met. The strong pull-up and pull-down impedances of the TCA4311A are capable of meeting rise- and fall-time specifications for one nano-Farad of capacitance, thus allowing much more interconnect distance. In this situation, the differential ground voltage between the two systems may limit the allowed distance, because a valid logic low voltage with respect to the ground at one end of the system may violate the allowed V_{OL} specification with respect to the ground at the other end. In addition, the connection circuitry offset voltages of the back-to-back TCA4311A add together, directly contributing to the same problem.

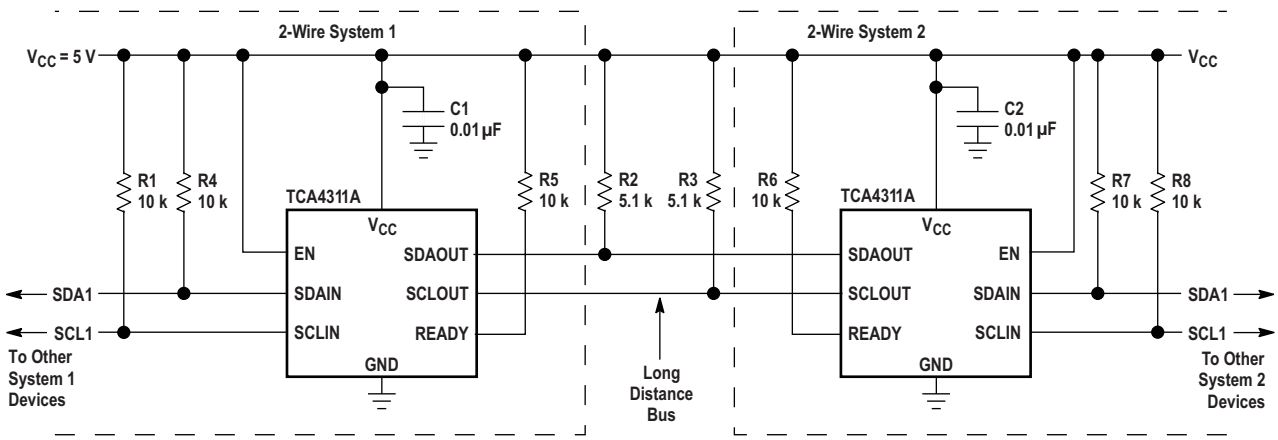

Figure 13. Repeater/Bus Extender Schematic

10.2.4.1 Design Requirements

Refer to *Design Requirements*.

10.2.4.2 Detailed Design Procedure

Refer to *Detailed Design Procedure*.

10.2.4.3 Application Curves

Refer to *Application Curves*.

Typical Application (continued)

10.2.5 Systems With Disparate Supply Voltages

In large 2-wire systems, the V_{CC} voltages seen by devices at various points in the system can differ by a few hundred millivolts or more. This situation is well modeled by a series resistor in the V_{CC} line, as shown in Figure 14. For proper operation of the TCA4311A, make sure that $V_{CC(BUS)} \geq V_{CC(TCA4311A)} - 0.5$ V.

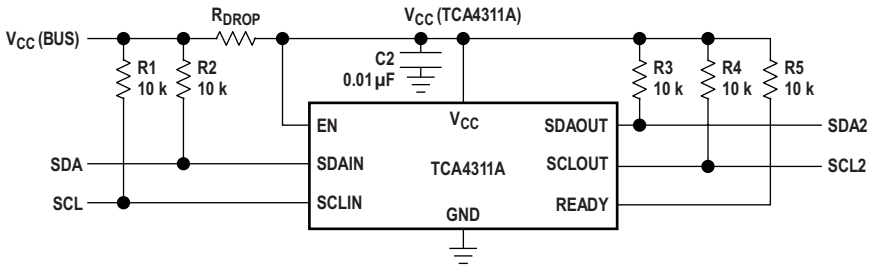

Figure 14. System With Disparate V_{CC} Voltages Schematic

10.2.5.1 Design Requirements

Refer to *Design Requirements*.

10.2.5.2 Detailed Design Procedure

Refer to *Detailed Design Procedure*.

10.2.5.3 Application Curves

Refer to *Application Curves*.

Copyright © 2011–2014, Texas Instruments Incorporated

11 Power Supply Recommendations

In order for the pre-charge circuitry to dampen the effect of hot-swap insertion of the TCA4311A into an active I^2C bus, V_{CC} must be applied before the SCL and SDA pins make contact to the main I^2C bus. This is essential when the TCA4311A is placed on the add-on card circuit board, as in Figure 11. Although the pre-charge circuitry exists on both the -IN and -OUT side, the example in Figure 11 shows SCLIN and SDAIN connecting to the main bus. The supply voltage to V_{CC} can be applied early by ensuring that the VCC and GND pin contacts are physically longer than the contacts for the SCLIN and SDAIN pins. If a voltage supervisor will also be used to control the voltage supply on the add-on card, additional delay will exist before the 1 V pre-charge voltage is present on the SCL and SDA pins.

12 Layout

12.1 Layout Guidelines

For printed circuit board (PCB) layout of the TCA4311A, common PCB layout practices should be followed but additional concerns related to high-speed data transfer such as matched impedances and differential pairs are not a concern for I^2C signal speeds.

In all PCB layouts, it is a best practice to avoid right angles in signal traces, to fan out signal traces away from each other upon leaving the vicinity of an integrated circuit (IC), and to use thicker trace widths to carry higher amounts of current that commonly pass through power and ground traces. By-pass and de-coupling capacitors are commonly used to control the voltage on the VCC pin, using a larger capacitor to provide additional power in the event of a short power supply glitch and a smaller capacitor to filter out high-frequency ripple. These capacitors should be placed as close to the TCA4311A as possible. These best practices are shown in Figure 15.

The layout example provided in Figure 15 shows a 4 layer board, which is preferable for boards with higher density signal routing. On a 4 layer PCB, it is common to route signals on the top and bottom layer, dedicate one internal layer to a ground plane, and dedicate the other internal layer to a power plane. In a board layout using planes or split planes for power and ground, vias are placed directly next to the surface mount component pad which needs to attach to V_{CC} or GND and the via is connected electrically to the internal layer or the other side of the board. Vias are also used when a signal trace needs to be routed to the opposite side of the board, shown in Figure 15 for the V_{CC} side of the resistor connected to the EN pin; however, this routing and via is not necessary if V_{CC} and GND are both full planes as opposed to the partial planes depicted.

Copyright © 2011–2014, Texas Instruments Incorporated

12.2 Layout Example

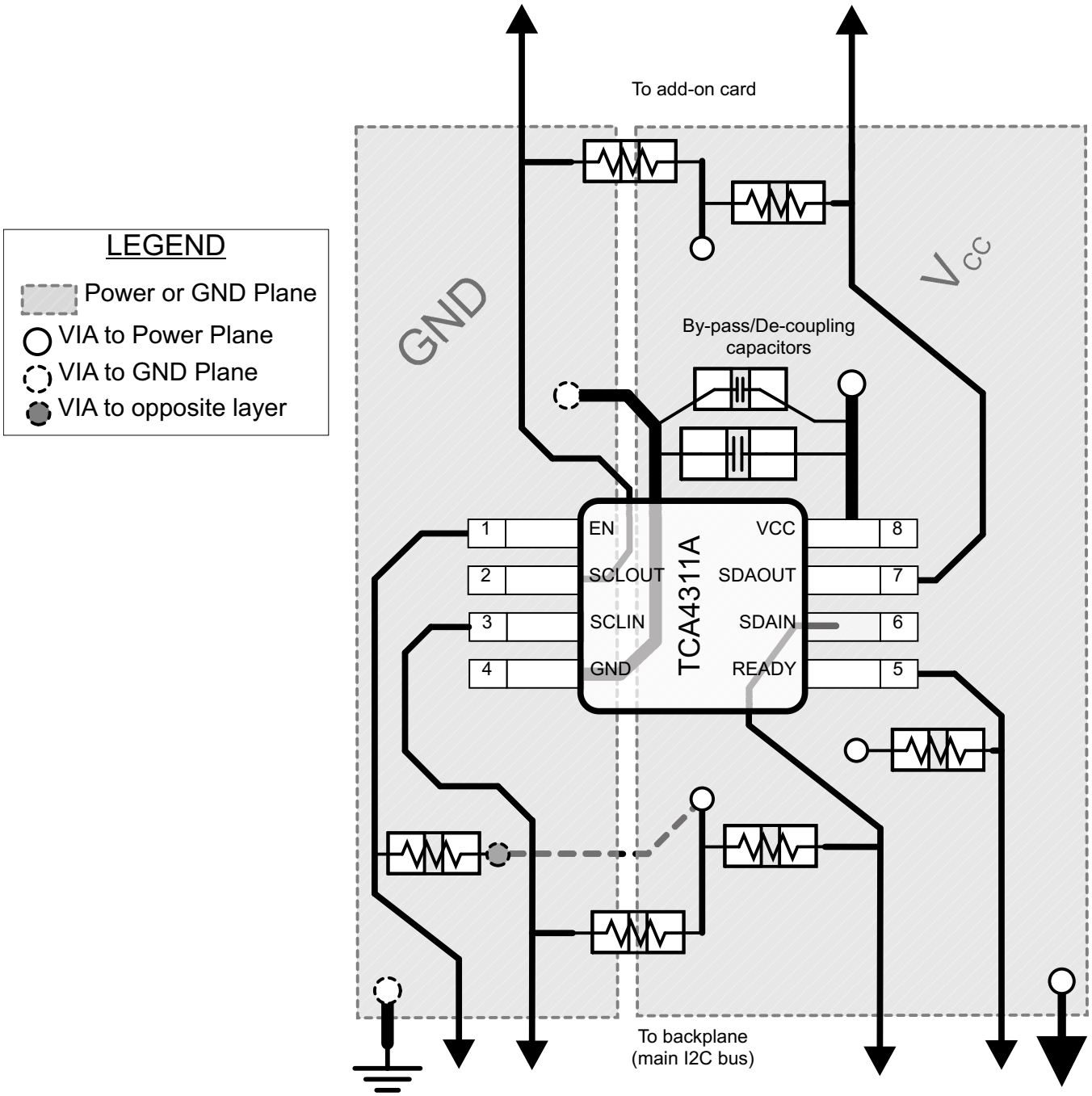

Figure 15. Package Layout

Copyright © 2011–2014, Texas Instruments Incorporated

13 Device and Documentation Support

13.1 Trademarks

CompactPCI is a trademark of PCI Industrial Computer Manufacturers Group.
All other trademarks are the property of their respective owners.

13.2 Electrostatic Discharge Caution

These devices have limited built-in ESD protection. The leads should be shorted together or the device placed in conductive foam during storage or handling to prevent electrostatic damage to the MOS gates.

13.3 Glossary

SLYZ022 — *TI Glossary*.

This glossary lists and explains terms, acronyms, and definitions.

14 Mechanical, Packaging, and Orderable Information

The following pages include mechanical, packaging, and orderable information. This information is the most current data available for the designated devices. This data is subject to change without notice and revision of this document. For browser-based versions of this data sheet, refer to the left-hand navigation.

PACKAGING INFORMATION

Orderable Device	Status (1)	Package Type	Package Drawing	Pins	Package Qty	Eco Plan (2)	Lead/Ball Finish (6)	MSL Peak Temp (3)	Op Temp (°C)	Device Marking (4/5)	Samples
TCA4311AD	PREVIEW	SOIC	D	8	50	TBD	Call TI	Call TI	-40 to 85		
TCA4311ADGKR	ACTIVE	VSSOP	DGK	8	2500	Green (RoHS & no Sb/Br)	CU NIPDAU	Level-1-260C-UNLIM	-40 to 85	(6KS ~ 6KU)	Samples
TCA4311ADR	ACTIVE	SOIC	D	8	2500	Green (RoHS & no Sb/Br)	CU NIPDAU	Level-1-260C-UNLIM	-40 to 85	PR311A	Samples

(1) The marketing status values are defined as follows:
ACTIVE: Product device recommended for new designs.
LIFEBUY: TI has announced that the device will be discontinued, and a lifetime-buy period is in effect.
NRND: Not recommended for new designs. Device is in production to support existing customers, but TI does not recommend using this part in a new design.
PREVIEW: Device has been announced but is not in production. Samples may or may not be available.
OBSOLETE: TI has discontinued the production of the device.

(2) Eco Plan - The planned eco-friendly classification: Pb-Free (RoHS), Pb-Free (RoHS Exempt), or Green (RoHS & no Sb/Br) - please check http://www.ti.com/productcontent for the latest availability information and additional product content details.
TBD: The Pb-Free/Green conversion plan has not been defined.
Pb-Free (RoHS): TI's terms "Lead-Free" or "Pb-Free" mean semiconductor products that are compatible with the current RoHS requirements for all 6 substances, including the requirement that lead not exceed 0.1% by weight in homogeneous materials. Where designed to be soldered at high temperatures, TI Pb-Free products are suitable for use in specified lead-free processes.
Pb-Free (RoHS Exempt): This component has a RoHS exemption for either 1) lead-based flip-chip solder bumps used between the die and package, or 2) lead-based die adhesive used between the die and leadframe. The component is otherwise considered Pb-Free (RoHS compatible) as defined above.
Green (RoHS & no Sb/Br): TI defines "Green" to mean Pb-Free (RoHS compatible), and free of Bromine (Br) and Antimony (Sb) based flame retardants (Br or Sb do not exceed 0.1% by weight in homogeneous material)

(3) MSL, Peak Temp. - The Moisture Sensitivity Level rating according to the JEDEC industry standard classifications, and peak solder temperature.

(4) There may be additional marking, which relates to the logo, the lot trace code information, or the environmental category on the device.

(5) Multiple Device Markings will be inside parentheses. Only one Device Marking contained in parentheses and separated by a "~" will appear on a device. If a line is indented then it is a continuation of the previous line and the two combined represent the entire Device Marking for that device.

(6) Lead/Ball Finish - Orderable Devices may have multiple material finish options. Finish options are separated by a vertical ruled line. Lead/Ball Finish values may wrap to two lines if the finish value exceeds the maximum column width.

Important Information and Disclaimer: The information provided on this page represents TI's knowledge and belief as of the date that it is provided. TI bases its knowledge and belief on information provided by third parties, and makes no representation or warranty as to the accuracy of such information. Efforts are underway to better integrate information from third parties. TI has taken and

continues to take reasonable steps to provide representative and accurate information but may not have conducted destructive testing or chemical analysis on incoming materials and chemicals.
TI and TI suppliers consider certain information to be proprietary, and thus CAS numbers and other limited information may not be available for release.

In no event shall TI's liability arising out of such information exceed the total purchase price of the TI part(s) at issue in this document sold by TI to Customer on an annual basis.

TAPE AND REEL INFORMATION

REEL DIMENSIONS

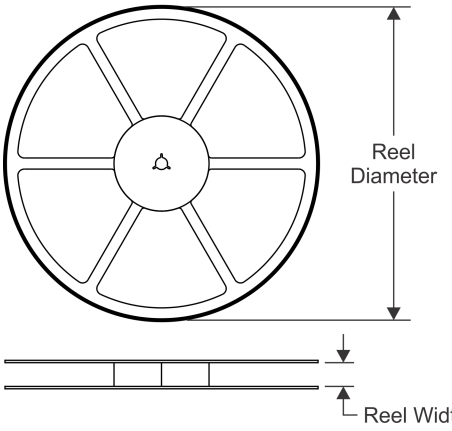

TAPE DIMENSIONS

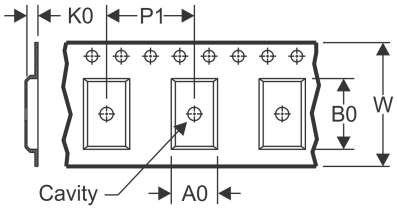

A0	Dimension designed to accommodate the component width
B0	Dimension designed to accommodate the component length
K0	Dimension designed to accommodate the component thickness
W	Overall width of the carrier tape
P1	Pitch between successive cavity centers

QUADRANT ASSIGNMENTS FOR PIN 1 ORIENTATION IN TAPE

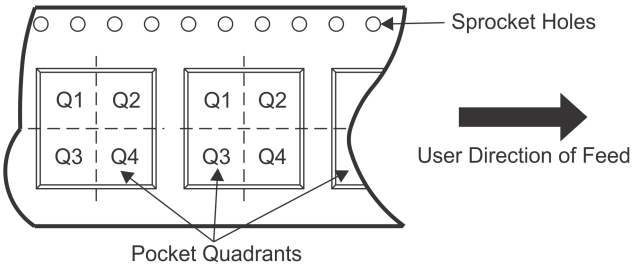

*All dimensions are nominal

Device	Package Type	Package Drawing	Pins	SPQ	Reel Diameter (mm)	Reel Width W1 (mm)	A0 (mm)	B0 (mm)	K0 (mm)	P1 (mm)	W (mm)	Pin1 Quadrant
TCA4311ADGKR	VSSOP	DGK	8	2500	330.0	12.4	5.3	3.4	1.4	8.0	12.0	Q1
TCA4311ADR	SOIC	D	8	2500	330.0	12.4	6.4	5.2	2.1	8.0	12.0	Q1

TAPE AND REEL BOX DIMENSIONS

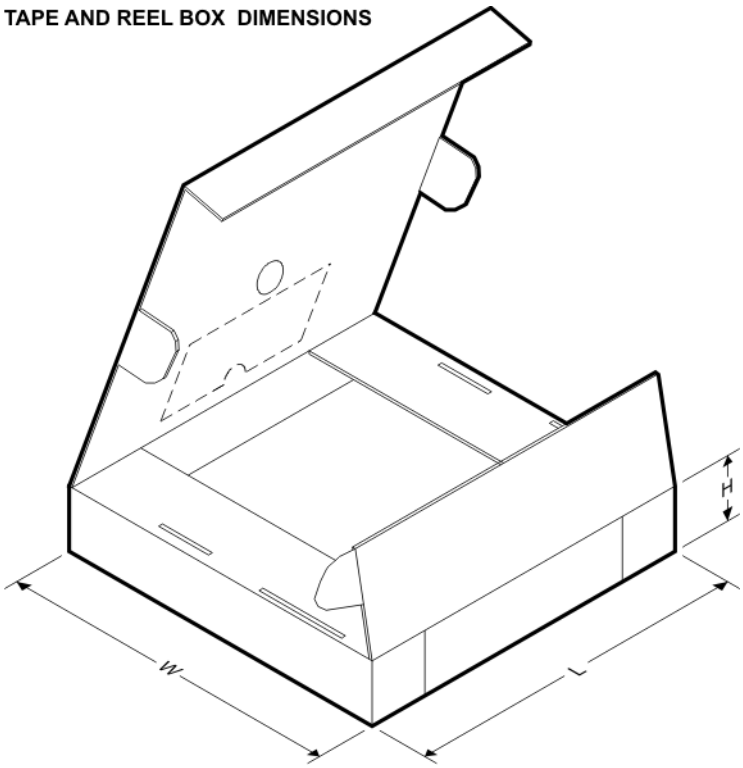

*All dimensions are nominal

Device	Package Type	Package Drawing	Pins	SPQ	Length (mm)	Width (mm)	Height (mm)
TCA4311ADGKR	VSSOP	DGK	8	2500	358.0	335.0	35.0
TCA4311ADR	SOIC	D	8	2500	367.0	367.0	35.0

DGK (S–PDSO–G8) PLASTIC SMALL–OUTLINE PACKAGE

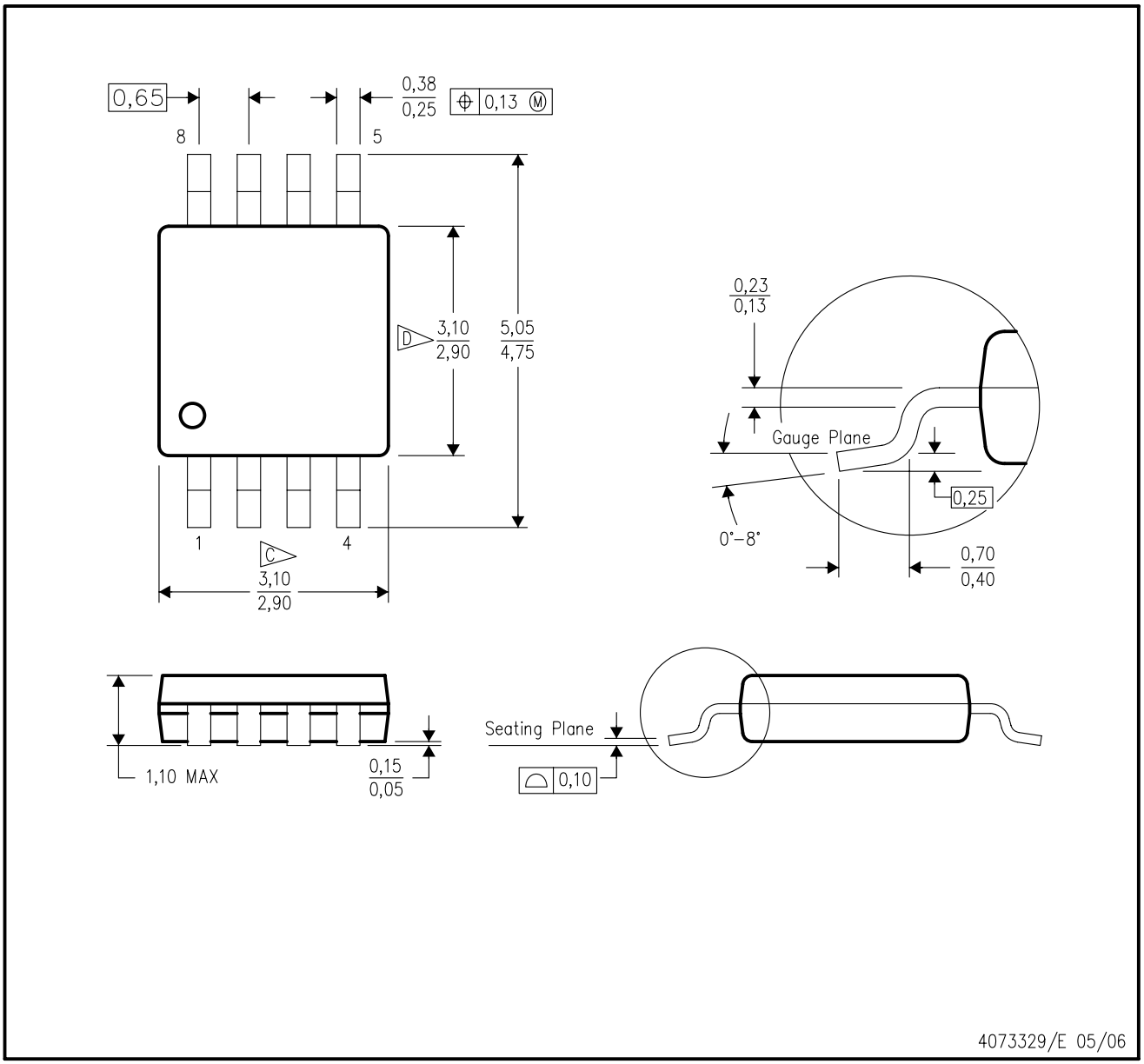

NOTES:
A. All linear dimensions are in millimeters.
B. This drawing is subject to change without notice.
C. Body length does not include mold flash, protrusions, or gate burrs. Mold flash, protrusions, or gate burrs shall not exceed 0.15 per end.
D. Body width does not include interlead flash. Interlead flash shall not exceed 0.50 per side.
E. Falls within JEDEC MO–187 variation AA, except interlead flash.

DGK (S–PDSO–G8) PLASTIC SMALL OUTLINE PACKAGE

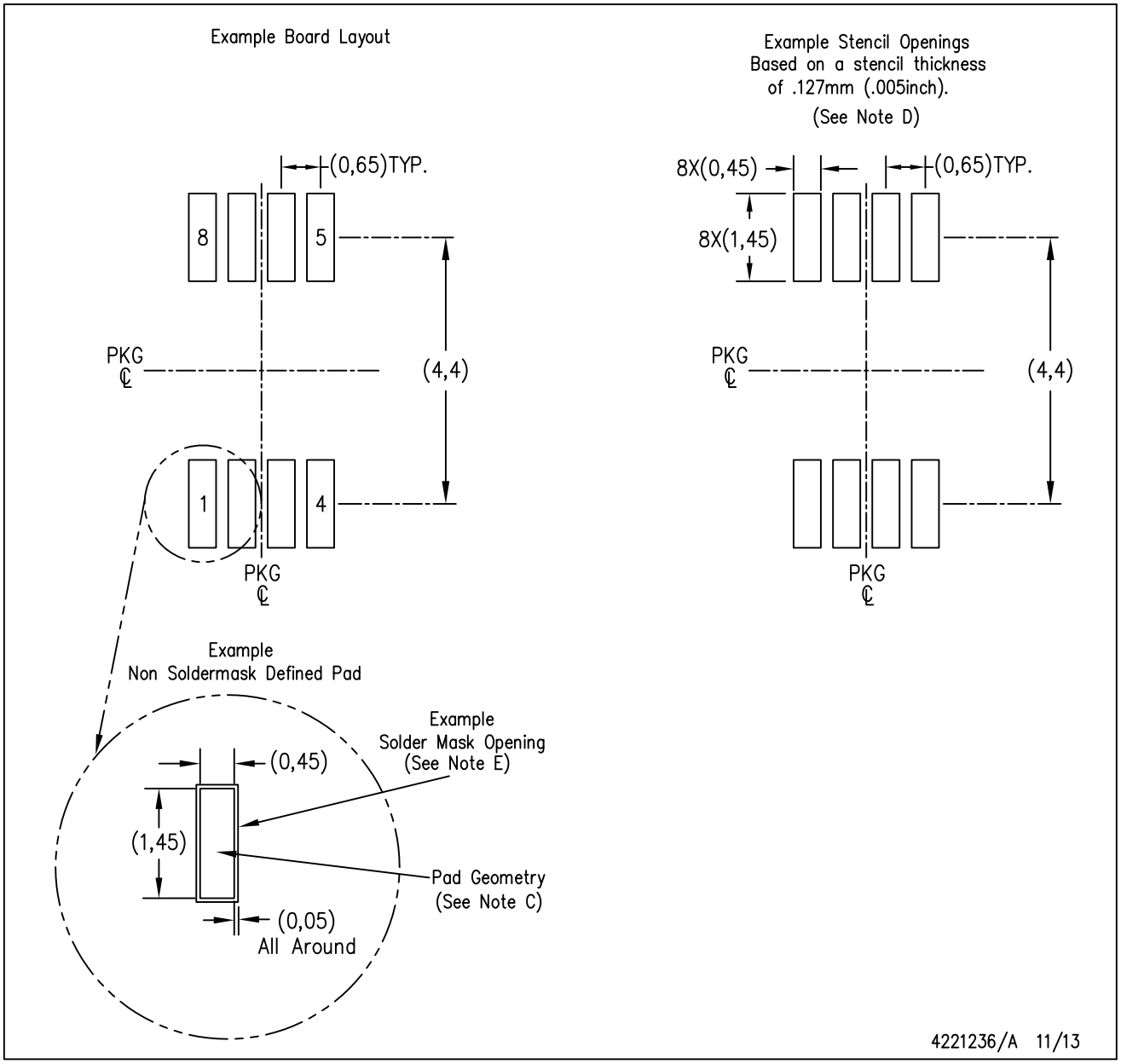

NOTES:
A. All linear dimensions are in millimeters.
B. This drawing is subject to change without notice.
C. Publication IPC–7351 is recommended for alternate designs.
D. Laser cutting apertures with trapezoidal walls and also rounding corners will offer better paste release. Customers should contact their board assembly site for stencil design recommendations. Refer to IPC–7525 for other stencil recommendations.
E. Customers should contact their board fabrication site for solder mask tolerances between and around signal pads.

D (R–PDSO–G8) PLASTIC SMALL OUTLINE

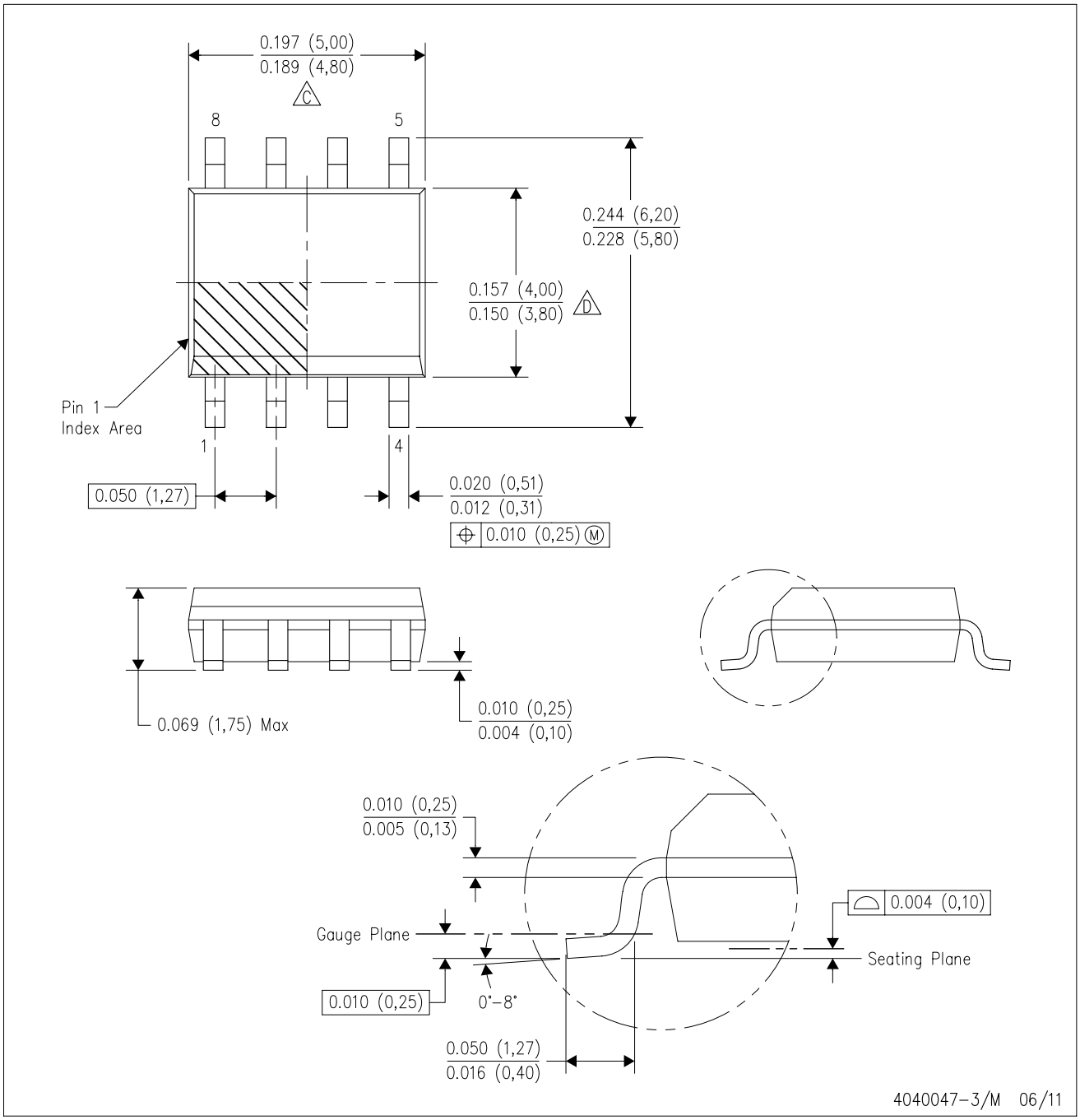

NOTES:
A. All linear dimensions are in inches (millimeters).
B. This drawing is subject to change without notice.
C. Body length does not include mold flash, protrusions, or gate burrs. Mold flash, protrusions, or gate burrs shall not exceed 0.006 (0,15) each side.
D. Body width does not include interlead flash. Interlead flash shall not exceed 0.017 (0,43) each side.
E. Reference JEDEC MS–012 variation AA.

D (R–PDSO–G8) PLASTIC SMALL OUTLINE

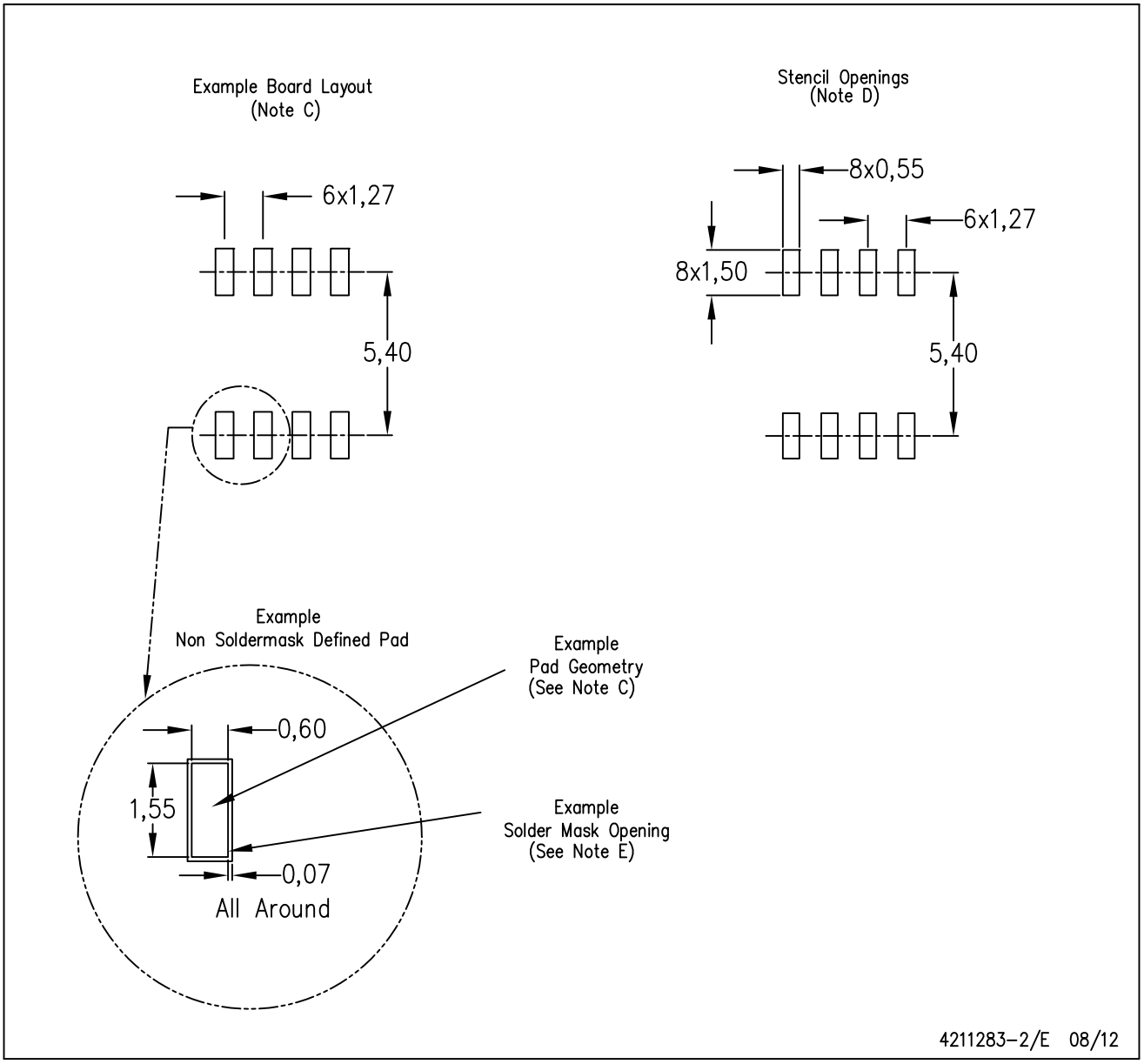

NOTES:
A. All linear dimensions are in millimeters.
B. This drawing is subject to change without notice.
C. Publication IPC–7351 is recommended for alternate designs.
D. Laser cutting apertures with trapezoidal walls and also rounding corners will offer better paste release. Customers should contact their board assembly site for stencil design recommendations. Refer to IPC–7525 for other stencil recommendations.
E. Customers should contact their board fabrication site for solder mask tolerances between and around signal pads.

IMPORTANT NOTICE

Texas Instruments Incorporated and its subsidiaries (TI) reserve the right to make corrections, enhancements, improvements and other changes to its semiconductor products and services per JESD46, latest issue, and to discontinue any product or service per JESD48, latest issue. Buyers should obtain the latest relevant information before placing orders and should verify that such information is current and complete. All semiconductor products (also referred to herein as “components”) are sold subject to TI’s terms and conditions of sale supplied at the time of order acknowledgment.

TI warrants performance of its components to the specifications applicable at the time of sale, in accordance with the warranty in TI’s terms and conditions of sale of semiconductor products. Testing and other quality control techniques are used to the extent TI deems necessary to support this warranty. Except where mandated by applicable law, testing of all parameters of each component is not necessarily performed.

TI assumes no liability for applications assistance or the design of Buyers’ products. Buyers are responsible for their products and applications using TI components. To minimize the risks associated with Buyers’ products and applications, Buyers should provide adequate design and operating safeguards.

TI does not warrant or represent that any license, either express or implied, is granted under any patent right, copyright, mask work right, or other intellectual property right relating to any combination, machine, or process in which TI components or services are used. Information published by TI regarding third-party products or services does not constitute a license to use such products or services or a warranty or endorsement thereof. Use of such information may require a license from a third party under the patents or other intellectual property of the third party, or a license from TI under the patents or other intellectual property of TI.

Reproduction of significant portions of TI information in TI data books or data sheets is permissible only if reproduction is without alteration and is accompanied by all associated warranties, conditions, limitations, and notices. TI is not responsible or liable for such altered documentation. Information of third parties may be subject to additional restrictions.

Resale of TI components or services with statements different from or beyond the parameters stated by TI for that component or service voids all express and any implied warranties for the associated TI component or service and is an unfair and deceptive business practice. TI is not responsible or liable for any such statements.

Buyer acknowledges and agrees that it is solely responsible for compliance with all legal, regulatory and safety-related requirements concerning its products, and any use of TI components in its applications, notwithstanding any applications-related information or support that may be provided by TI. Buyer represents and agrees that it has all the necessary expertise to create and implement safeguards which anticipate dangerous consequences of failures, monitor failures and their consequences, lessen the likelihood of failures that might cause harm and take appropriate remedial actions. Buyer will fully indemnify TI and its representatives against any damages arising out of the use of any TI components in safety-critical applications.

In some cases, TI components may be promoted specifically to facilitate safety-related applications. With such components, TI’s goal is to help enable customers to design and create their own end-product solutions that meet applicable functional safety standards and requirements. Nonetheless, such components are subject to these terms.

No TI components are authorized for use in FDA Class III (or similar life-critical medical equipment) unless authorized officers of the parties have executed a special agreement specifically governing such use.

Only those TI components which TI has specifically designated as military grade or “enhanced plastic” are designed and intended for use in military/aerospace applications or environments. Buyer acknowledges and agrees that any military or aerospace use of TI components which have ***not*** been so designated is solely at the Buyer's risk, and that Buyer is solely responsible for compliance with all legal and regulatory requirements in connection with such use.

TI has specifically designated certain components as meeting ISO/TS16949 requirements, mainly for automotive use. In any case of use of non-designated products, TI will not be responsible for any failure to meet ISO/TS16949.

Products		**Applications**	
Audio	www.ti.com/audio	Automotive and Transportation	www.ti.com/automotive
Amplifiers	amplifier.ti.com	Communications and Telecom	www.ti.com/communications
Data Converters	dataconverter.ti.com	Computers and Peripherals	www.ti.com/computers
DLP® Products	www.dlp.com	Consumer Electronics	www.ti.com/consumer-apps
DSP	dsp.ti.com	Energy and Lighting	www.ti.com/energy
Clocks and Timers	www.ti.com/clocks	Industrial	www.ti.com/industrial
Interface	interface.ti.com	Medical	www.ti.com/medical
Logic	logic.ti.com	Security	www.ti.com/security
Power Mgmt	power.ti.com	Space, Avionics and Defense	www.ti.com/space-avionics-defense
Microcontrollers	microcontroller.ti.com	Video and Imaging	www.ti.com/video
RFID	www.ti-rfid.com		
OMAP Applications Processors	www.ti.com/omap	**TI E2E Community**	e2e.ti.com
Wireless Connectivity	www.ti.com/wirelessconnectivity		

Mailing Address: Texas Instruments, Post Office Box 655303, Dallas, Texas 75265
Copyright © 2014, Texas Instruments Incorporated