SLLS009D – OCTOBER 1985 – REVISED MAY 1995

- **Meet or Exceed the Requirements of ANSI Standard EIA/TIA-422-B and ITU Recommendation V.11**
- **Designed to Operate Up to 20 Mbaud**
- **3-State TTL-Compatible Outputs**
- **Single 5-V Supply Operation**
- **High Output Impedance in Power-Off Condition**
- **Two Pairs of Drivers, Independently Enabled**
- **Designed as Improved Replacements for the MC3487**

SN55ALS194 . . . J OR W PACKAGE
SN75ALS194 . . . D OR N PACKAGE
(TOP VIEW)

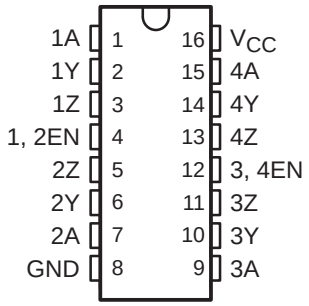

SN55ALS194 . . . FK PACKAGE
(TOP VIEW)

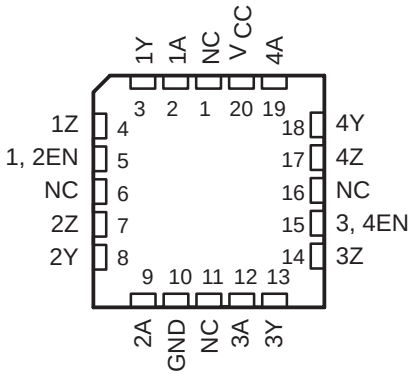

NC – No internal connection

description

These four differential line drivers are designed for data transmission over twisted-pair or parallel-wire transmission lines. They meet the requirements of ANSI Standard EIA/TIA-422-B and ITU Recommendation V.11 and are compatible with 3-state TTL circuits. Advanced low-power Schottky technology provides high speed without the usual power penalty. Standby supply current is typically only 26 mA. Typical propagation delay time is less than 10 ns, and enable/disable times are typically less than 16 ns.

High-impedance inputs keep input currents low: less than 1 μA for a high level and less than 100 μA for a low level. The driver circuits can be enabled in pairs by separate active-high enable inputs. The SN55ALS194 and SN75ALS194 are capable of data rates in excess of 20 megabits per second and are designed to operate with the SN55ALS195 and SN75ALS195 quadruple line receivers.

The SN55ALS194 is characterized for operation over the full military temperature range of –55°C to 125°C. The SN75ALS194 is characterized for operation from 0°C to 70°C.

FUNCTION TABLE
(each driver)

INPUTS A	OUTPUT EN	OUTPUTS Y	OUTPUTS Z
H	H	H	L
L	H	L	H
X	L	Z	Z

H = high level, L = low level, X = irrelevant,
Z = high impedance

Please be aware that an important notice concerning availability, standard warranty, and use in critical applications of Texas Instruments semiconductor products and disclaimers thereto appears at the end of this data sheet.

PRODUCTION DATA information is current as of publication date. Products conform to specifications per the terms of Texas Instruments standard warranty. Production processing does not necessarily include testing of all parameters.

Copyright © 1995, Texas Instruments Incorporated

logic symbol†

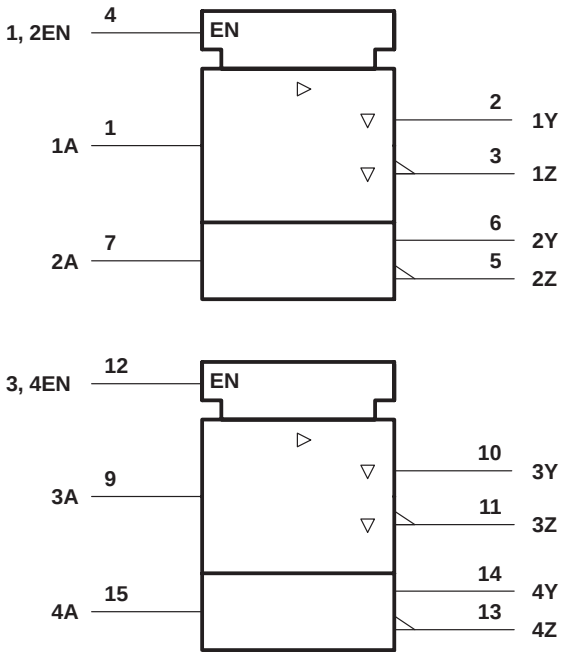

† This symbol is in accordance with ANSI/IEEE Std 91-1984 and IEC Publication 617-12.
Pin numbers shown are for the D, J, N, and W packages.

logic diagram (positive logic)

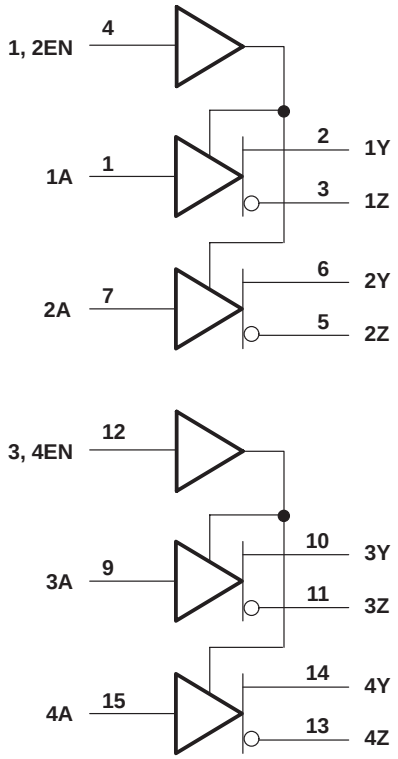

schematics of inputs and outputs

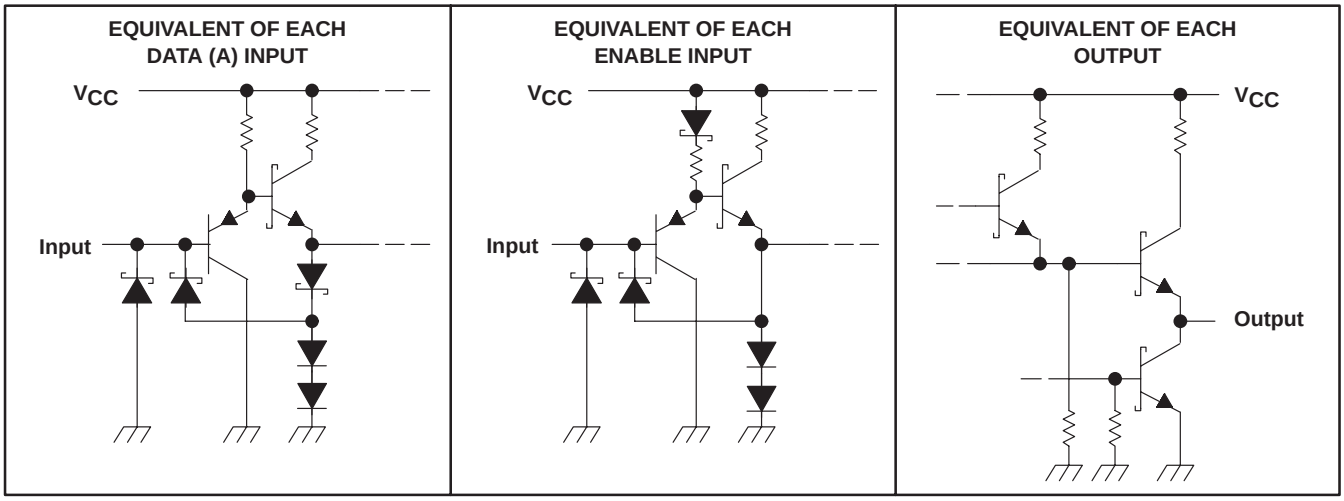

absolute maximum ratings over operating free-air temperature range (unless otherwise noted)†

Supply voltage, V_{CC} (see Note 1) . . . . . 7 V
Input voltage, V_I . . . . . 5.5 V
Output voltage, V_O . . . . . 7 V
Continuous total dissipation . . . . . See Dissipation Rating Table
Operating free-air temperature range, T_A: SN55ALS194 . . . . . – 55°C to 125°C
SN75ALS194 . . . . . 0°C to 70°C
Storage temperature range, T_{stg} . . . . . – 65°C to 150°C
Case temperature for 60 seconds, T_C: FK package . . . . . 260°C
Lead temperature 1,6 mm (1/16 inch) from case for 10 seconds: D, N, or W package . . . . . 260°C
Lead temperature 1,6 mm (1/16 inch) from case for 60 seconds: J package . . . . . 300°C

† Stresses beyond those listed under “absolute maximum ratings” may cause permanent damage to the device. These are stress ratings only, and functional operation of the device at these or any other conditions beyond those indicated under “recommended operating conditions” is not implied. Exposure to absolute-maximum-rated conditions for extended periods may affect device reliability.
NOTE 1: All voltage values are with respect to network ground terminal

DISSIPATION RATING TABLE

PACKAGE	$T_A \le 25°C$ POWER RATING	DERATING FACTOR ABOVE $T_A = 25°C$	$T_A = 70°C$ POWER RATING	$T_A = 125°C$ POWER RATING
D	950 mW	7.6 mW/°C	608 mW	N/A
FK	1375 mW	11.0 mW/°C	880 mW	275 mW
J	1375 mW	11.0 mW/°C	880 mW	275 mW
N	1150 mW	9.2 mW/°C	736 mW	N/A
W	1000 mW	8.0 mW/°C	640 mW	200 mW

recommended operating conditions‡

		SN55ALS194			SN75ALS194			UNIT
		MIN	NOM	MAX	MIN	NOM	MAX	
Supply voltage, V_{CC}		4.5	5	5.5	4.75	5	5.25	V
High-level input voltage, V_{IH}	All inputs, $T_A = 25°C$	2			2			V
	A inputs, T_A = Full range	2			2			
	EN inputs, T_A = Full range	2.1			2			
Low-level input voltage, V_{IL}				0.8			0.8	V
High-level output current, I_{OH}				– 20			– 20	mA
Low-level output current, I_{OL}	$T_A = 25°C$			48			48	mA
	T_A = Full range			20			48	
Operating free-air temperature, T_A		– 55		125	0		70	°C

‡ Full range is T_A = – 55°C to 125°C for SN55ALS194 and T_A = 0°C to 70°C for SN75ALS194.

electrical characteristics over recommended ranges of supply voltage and operating free-air temperature range (unless otherwise noted)

PARAMETER		TEST CONDITIONS†		MIN	TYP‡	MAX	UNIT
V_{IK}	Input clamp voltage	V_{CC} = MIN,	I_I = –18 mA			– 1.5	V
V_{OH}	High-level output voltage	V_{CC} = MIN, I_{OH} = –20 mA	SN55ALS194	2.4			V
			SN75ALS194	2.5			
V_{OL}	Low-level output voltage	V_{CC} = MIN,	I_{OL} = MAX			0.5	V
V_O	Output voltage	I_O = 0		0		6	V
$\|V_{OD1}\|$	Differential output voltage	I_O = 0		1.5		6	V
$\|V_{OD2}\|$	Differential output voltage	R_L = 100 Ω,	See Figure 1	1/2 V_{OD1} or 2§			V
$\Delta\|V_{OD}\|$	Change in magnitude of differential output voltage¶					± 0.4	V
V_{OC}	Common-mode output voltage					± 3	V
$\Delta\|V_{OC}\|$	Change in magnitude of common-mode output voltage¶					± 0.4	V
I_O	Output current with power off	V_{CC} = 0	V_O = 6 V			100	µA
			V_O = – 0.25 V			– 100	
I_{OZ}	High-impedance-state output current	V_{CC} = MAX, Output enables at 0.8 V	V_O = 2.7 V			100	µA
			V_O = 0.5 V			– 100	
I_I	Input current at maximum input voltage	V_{CC} = MAX,	V_I = 5.5 V			100	µA
I_{IH}	High-level input current	V_{CC} = MAX,	V_I = 2.7 V			50	µA
I_{IL}	Low-level input current	V_{CC} = MAX,	V_I = 0.5 V			– 200	µA
I_{OS}	Short-circuit output current#	V_{CC} = MAX,	V_I = 2 V	– 40		– 140	mA
I_{CC}	Supply current (all drivers)	V_{CC} = MAX,	All outputs disabled		26	45	mA

† For conditions shown as MIN or MAX, use the appropriate value specified under recommended operating conditions.
‡ All typical values are at V_{CC} = 5 V, TA = 25°C.
§ The minimum V_{OD2} with a 100-Ω load is either 1/2 V_{OD1} or 2 V, whichever is greater.
¶ $\Delta\,|\,V_{OD}\,|$ and $\Delta\,|\,V_{OC}\,|$ are the changes in magnitude of V_{OD} and V_{OC}, respectively, that occur when the input is changed from a high level to a low level.
# Not more than one output should be shorted at a time, and duration of the short circuit should not exceed one second.

switching characteristics, V_{CC} = 5 V, T_A = 25°C

PARAMETER		TEST CONDITIONS	SN55ALS194			SN75ALS194			UNIT
			MIN	TYP	MAX	MIN	TYP	MAX	
t_{PLH}	Propagation delay time, low- to high-level output	C_L = 15 pF, See Figure 2		6	13		6	13	ns
t_{PHL}	Propagation delay time, high- to low-level output			9	14		9	14	ns
	Output-to-output skew			3.5	6		3.5	6	ns
$t_{t(OD)}$	Differential output transition time	C_L = 15 pF, See Figure 3		8	14		8	14	ns
t_{PZH}	Output enable time to high level	C_L = 15 pF, See Figure 4		9	12		9	12	ns
t_{PZL}	Output enable time to low level			12	20		12	20	ns
t_{PHZ}	Output disable time from high level			9	15		9	14	ns
t_{PLZ}	Output disable time from low level			12	15		12	15	ns

SYMBOL EQUIVALENTS

DATA SHEET PARAMETER	EIA/TIA-422-B
V_O	V_{oa}, V_{ob}
$\lvert V_{OD1} \rvert$	V_o
$\lvert V_{OD2} \rvert$	V_t (R_L = 100 Ω)
$\Delta \lvert V_{OD} \rvert$	$\lvert \lvert V_t \rvert - \lvert \overline{V}_t \rvert \rvert$
V_{OC}	$\lvert V_{os} \rvert$
$\Delta \lvert V_{OC} \rvert$	$\lvert V_{os} - \overline{V}_{os} \rvert$
I_{OS}	$\lvert I_{sa} \rvert$, $\lvert I_{sb} \rvert$
I_O	$\lvert I_{xa} \rvert$, $\lvert I_{xb} \rvert$

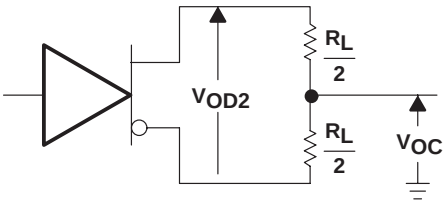

Figure 1. Driver V_{OD} and V_{OC}

PARAMETER MEASUREMENT INFORMATION

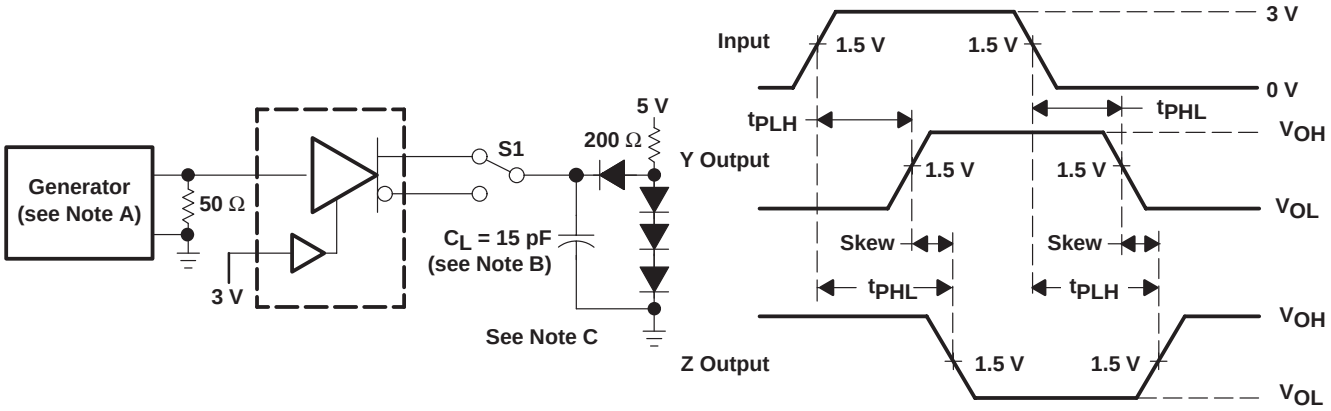

TEST CIRCUIT VOLTAGE WAVEFORM

NOTES: A. The input pulse is supplied by a generator having the following characteristics: $t_r \le 5$ ns, $t_f \le 5$ ns, PRR ≤ 1 MHz, duty cycle ≤ 50%, $Z_O \approx 50\ \Omega$.
B. C_L includes probe and stray capacitance.
C. All diodes are 1N916 or 1N3064.

Figure 2. Test Circuit and Voltage Waveform

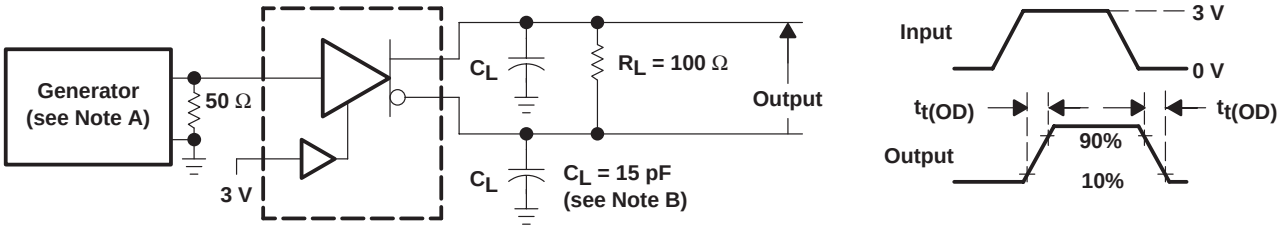

TEST CIRCUIT VOLTAGE WAVEFORM

NOTES: A. The input pulse is supplied by a generator having the following characteristics: $t_r \le 5$ ns, $t_f \le 5$ ns, PRR ≤ 1 MHz, duty cycle ≤ 50%, $Z_O \approx 50\ \Omega$.
B. C_L includes probe and stray capacitance.

Figure 3. Differential-Output Test Circuit and Voltage Waveform

PARAMETER MEASUREMENT INFORMATION

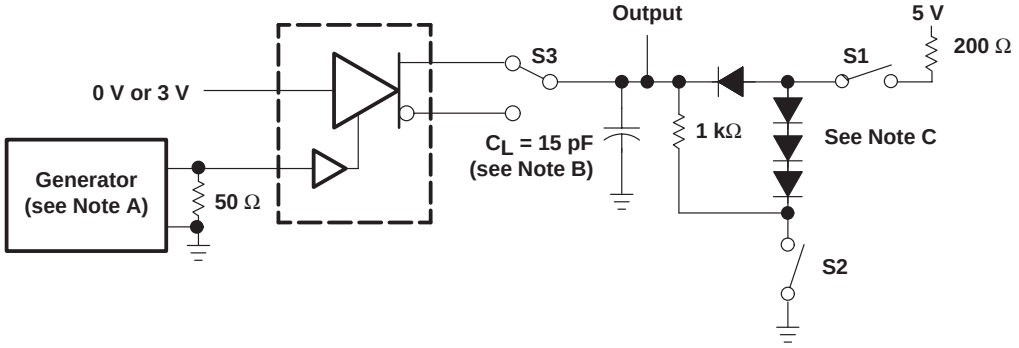

TEST CIRCUIT

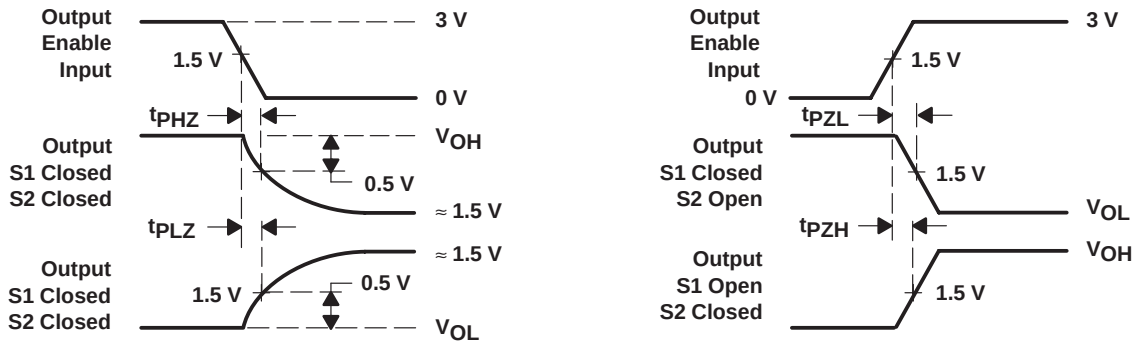

VOLTAGE WAVEFORMS

NOTES: A. The input pulse is supplied by a generator having the following characteristics: $t_r \leq 5$ ns, $t_f \leq 5$ ns, PRR ≤ 1 MHz, duty cycle $\leq 50\%$, $Z_O \approx 50\ \Omega$.
B. C_L includes probe and stray capacitance.
C. All diodes are 1N916 or 1N3064.

Figure 4. Driver Test Circuit and Voltage Waveforms

TYPICAL CHARACTERISTICS†

Y OUTPUT VOLTAGE vs DATA INPUT VOLTAGE

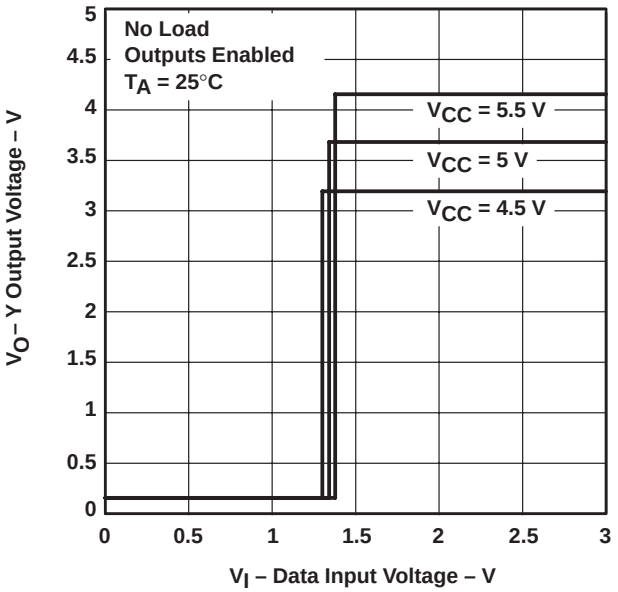

Figure 5

Y OUTPUT VOLTAGE vs DATA INPUT VOLTAGE

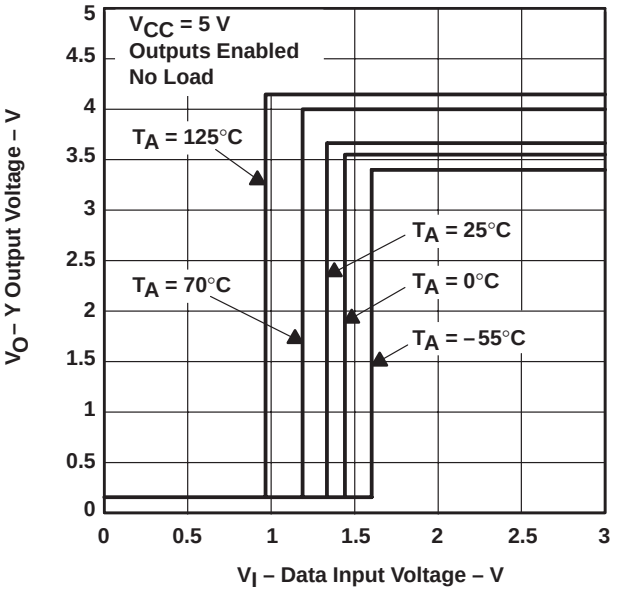

Figure 6

Y OUTPUT VOLTAGE vs ENABLE G INPUT VOLTAGE

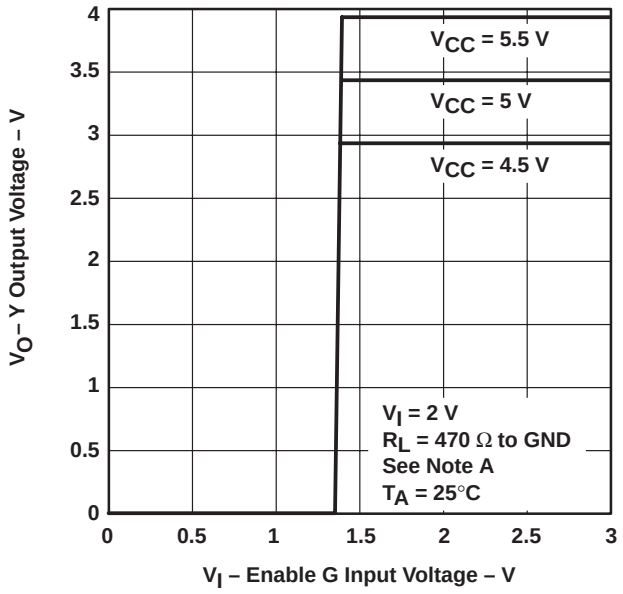

Figure 7

Y OUTPUT VOLTAGE vs ENABLE G INPUT VOLTAGE

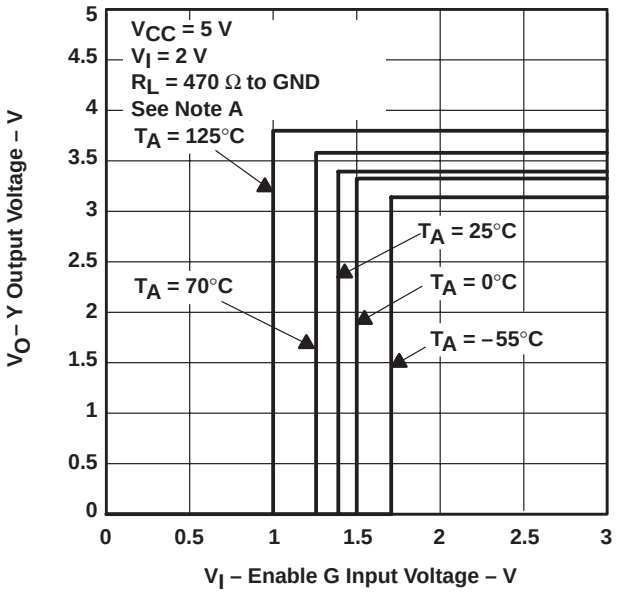

Figure 8

† Data for temperatures below 0°C and above 70°C are applicable to the SN55ALS194 circuits only.
NOTE A: The A input is connected to V_{CC} during the testing of the Y outputs and to GND during the testing of the Z outputs.

TYPICAL CHARACTERISTICS†

Z OUTPUT VOLTAGE vs ENABLE G INPUT VOLTAGE

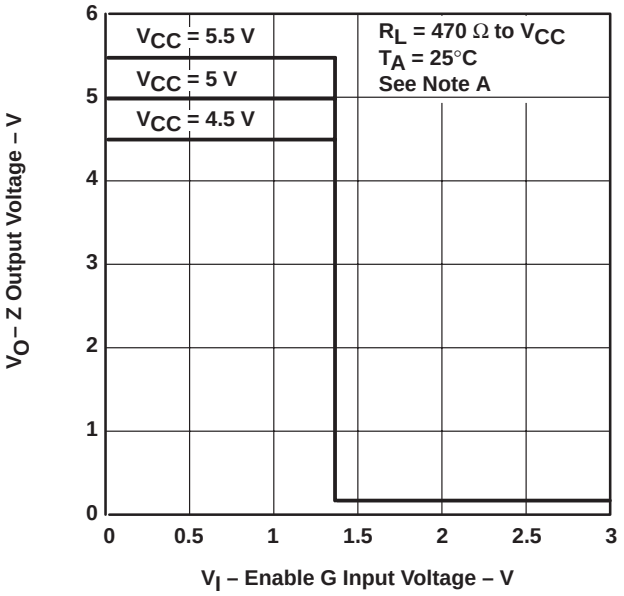

Figure 9

Z OUTPUT VOLTAGE vs ENABLE G INPUT VOLTAGE

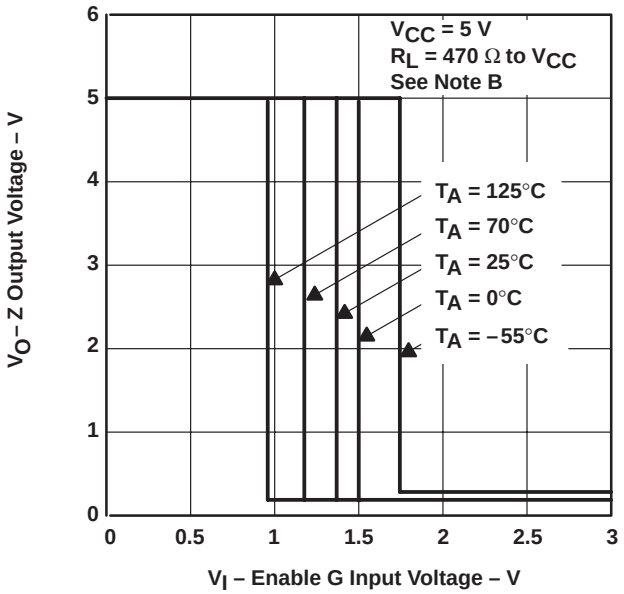

Figure 10

HIGH-LEVEL OUTPUT VOLTAGE vs FREE-AIR TEMPERATURE

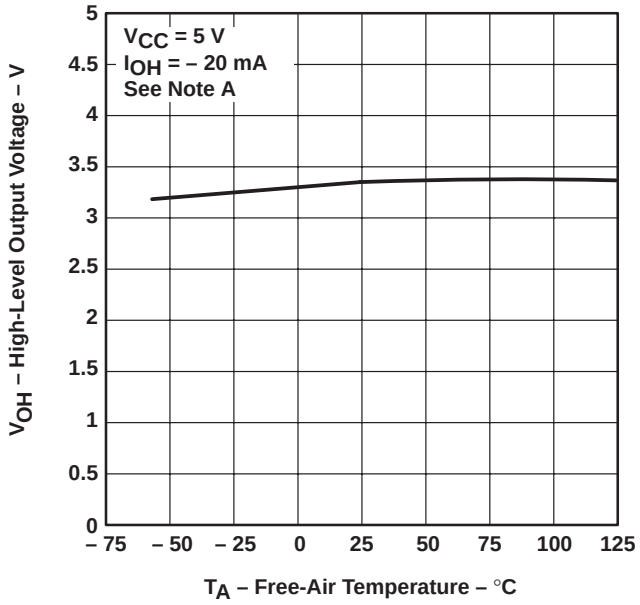

Figure 11

HIGH-LEVEL OUTPUT VOLTAGE vs HIGH-LEVEL OUTPUT CURRENT

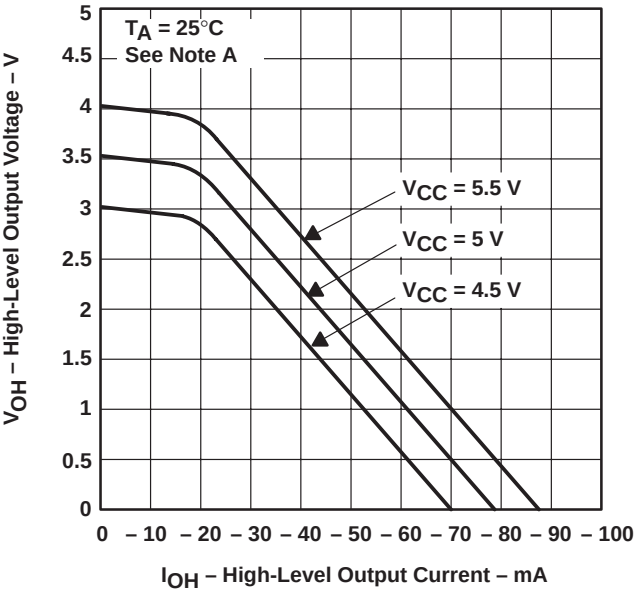

Figure 12

† Data for temperatures below 0°C and above 70°C are applicable to the SN55ALS194 circuits only.

NOTES: A. The A input is connected to V_{CC} during the testing of the Y outputs and to GND during the testing of the Z outputs.
B. The A input is connected to ground during the testing of the Y outputs and to V_{CC} during the testing of the Z outputs.

TYPICAL CHARACTERISTICS†

LOW-LEVEL OUTPUT VOLTAGE vs FREE-AIR TEMPERATURE

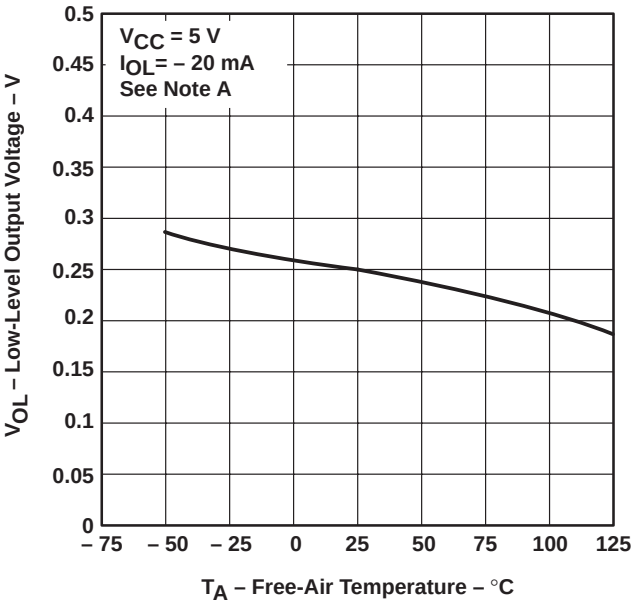

Figure 13

LOW-LEVEL OUTPUT VOLTAGE vs LOW-LEVEL OUTPUT CURRENT

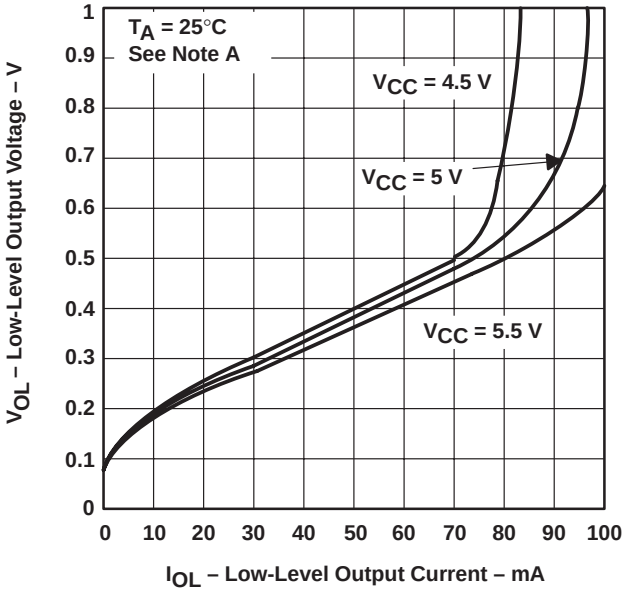

Figure 14

NOTE A: The A input is connected to GND during the testing of the Y outputs and to V_{CC} during the testing of the Z outputs.

SUPPLY CURRENT vs SUPPLY VOLTAGE

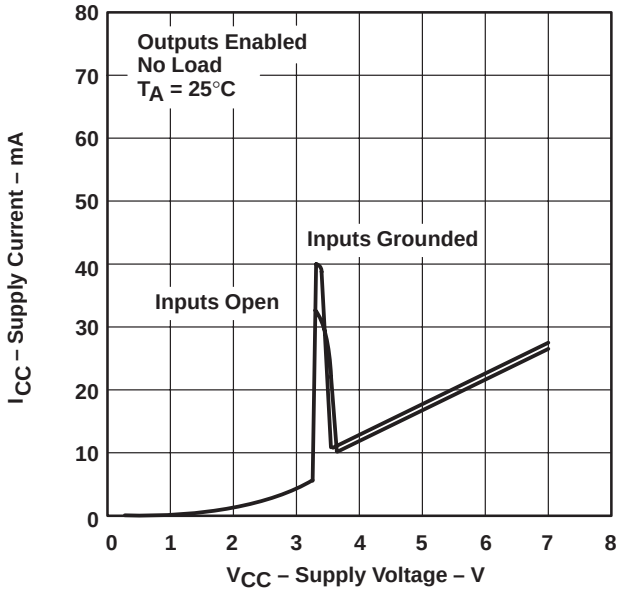

Figure 15

SUPPLY CURRENT vs SUPPLY VOLTAGE

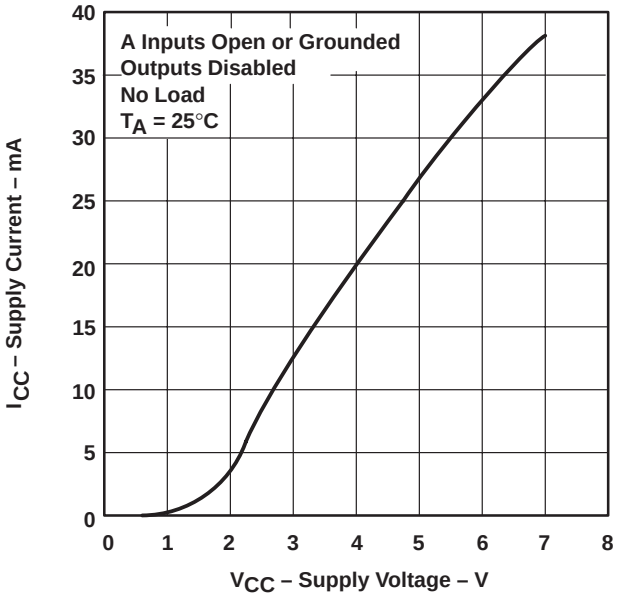

Figure 16

† Data for temperatures below 0°C and above 70°C are applicable to the SN55ALS194 circuits only.

TYPICAL CHARACTERISTICS

SUPPLY CURRENT
vs
FREQUENCY

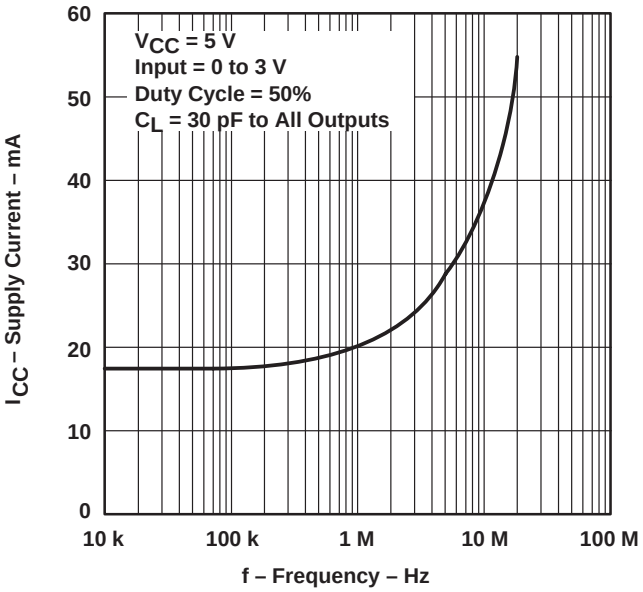

Figure 17

IMPORTANT NOTICE

Texas Instruments Incorporated and its subsidiaries (TI) reserve the right to make corrections, modifications, enhancements, improvements, and other changes to its products and services at any time and to discontinue any product or service without notice. Customers should obtain the latest relevant information before placing orders and should verify that such information is current and complete. All products are sold subject to TI's terms and conditions of sale supplied at the time of order acknowledgment.

TI warrants performance of its hardware products to the specifications applicable at the time of sale in accordance with TI's standard warranty. Testing and other quality control techniques are used to the extent TI deems necessary to support this warranty. Except where mandated by government requirements, testing of all parameters of each product is not necessarily performed.

TI assumes no liability for applications assistance or customer product design. Customers are responsible for their products and applications using TI components. To minimize the risks associated with customer products and applications, customers should provide adequate design and operating safeguards.

TI does not warrant or represent that any license, either express or implied, is granted under any TI patent right, copyright, mask work right, or other TI intellectual property right relating to any combination, machine, or process in which TI products or services are used. Information published by TI regarding third-party products or services does not constitute a license from TI to use such products or services or a warranty or endorsement thereof. Use of such information may require a license from a third party under the patents or other intellectual property of the third party, or a license from TI under the patents or other intellectual property of TI.

Reproduction of information in TI data books or data sheets is permissible only if reproduction is without alteration and is accompanied by all associated warranties, conditions, limitations, and notices. Reproduction of this information with alteration is an unfair and deceptive business practice. TI is not responsible or liable for such altered documentation.

Resale of TI products or services with statements different from or beyond the parameters stated by TI for that product or service voids all express and any implied warranties for the associated TI product or service and is an unfair and deceptive business practice. TI is not responsible or liable for any such statements.

TI products are not authorized for use in safety-critical applications (such as life support) where a failure of the TI product would reasonably be expected to cause severe personal injury or death, unless officers of the parties have executed an agreement specifically governing such use. Buyers represent that they have all necessary expertise in the safety and regulatory ramifications of their applications, and acknowledge and agree that they are solely responsible for all legal, regulatory and safety-related requirements concerning their products and any use of TI products in such safety-critical applications, notwithstanding any applications-related information or support that may be provided by TI. Further, Buyers must fully indemnify TI and its representatives against any damages arising out of the use of TI products in such safety-critical applications.

TI products are neither designed nor intended for use in military/aerospace applications or environments unless the TI products are specifically designated by TI as military-grade or "enhanced plastic." Only products designated by TI as military-grade meet military specifications. Buyers acknowledge and agree that any such use of TI products which TI has not designated as military-grade is solely at the Buyer's risk, and that they are solely responsible for compliance with all legal and regulatory requirements in connection with such use.

TI products are neither designed nor intended for use in automotive applications or environments unless the specific TI products are designated by TI as compliant with ISO/TS 16949 requirements. Buyers acknowledge and agree that, if they use any non-designated products in automotive applications, TI will not be responsible for any failure to meet such requirements.

Following are URLs where you can obtain information on other Texas Instruments products and application solutions:

Products		**Applications**	
Amplifiers	amplifier.ti.com	Audio	www.ti.com/audio
Data Converters	dataconverter.ti.com	Automotive	www.ti.com/automotive
DSP	dsp.ti.com	Broadband	www.ti.com/broadband
Interface	interface.ti.com	Digital Control	www.ti.com/digitalcontrol
Logic	logic.ti.com	Military	www.ti.com/military
Power Mgmt	power.ti.com	Optical Networking	www.ti.com/opticalnetwork
Microcontrollers	microcontroller.ti.com	Security	www.ti.com/security
Low Power Wireless	www.ti.com/lpw	Telephony	www.ti.com/telephony
		Video & Imaging	www.ti.com/video
		Wireless	www.ti.com/wireless

Mailing Address: Texas Instruments, Post Office Box 655303, Dallas, Texas 75265
Copyright © 2007, Texas Instruments Incorporated

PACKAGING INFORMATION

Orderable Device	Status [1]	Package Type	Package Drawing	Pins	Package Qty	Eco Plan [2]	Lead/Ball Finish	MSL Peak Temp [3]
SN55ALS194J	OBSOLETE	CDIP	J	16		TBD	Call TI	Call TI
SN75ALS194D	ACTIVE	SOIC	D	16	40	Green (RoHS & no Sb/Br)	CU NIPDAU	Level-1-260C-UNLIM
SN75ALS194DE4	ACTIVE	SOIC	D	16	40	Green (RoHS & no Sb/Br)	CU NIPDAU	Level-1-260C-UNLIM
SN75ALS194DG4	ACTIVE	SOIC	D	16	40	Green (RoHS & no Sb/Br)	CU NIPDAU	Level-1-260C-UNLIM
SN75ALS194DR	ACTIVE	SOIC	D	16	2500	Green (RoHS & no Sb/Br)	CU NIPDAU	Level-1-260C-UNLIM
SN75ALS194DRE4	ACTIVE	SOIC	D	16	2500	Green (RoHS & no Sb/Br)	CU NIPDAU	Level-1-260C-UNLIM
SN75ALS194DRG4	ACTIVE	SOIC	D	16	2500	Green (RoHS & no Sb/Br)	CU NIPDAU	Level-1-260C-UNLIM
SN75ALS194N	ACTIVE	PDIP	N	16	25	Pb-Free (RoHS)	CU NIPDAU	N / A for Pkg Type
SN75ALS194NE4	ACTIVE	PDIP	N	16	25	Pb-Free (RoHS)	CU NIPDAU	N / A for Pkg Type
SN75ALS194NSR	ACTIVE	SO	NS	16	2000	Green (RoHS & no Sb/Br)	CU NIPDAU	Level-1-260C-UNLIM
SN75ALS194NSRE4	ACTIVE	SO	NS	16	2000	Green (RoHS & no Sb/Br)	CU NIPDAU	Level-1-260C-UNLIM
SN75ALS194NSRG4	ACTIVE	SO	NS	16	2000	Green (RoHS & no Sb/Br)	CU NIPDAU	Level-1-260C-UNLIM
SNJ55ALS194FK	OBSOLETE	LCCC	FK	20		TBD	Call TI	Call TI
SNJ55ALS194J	OBSOLETE	CDIP	J	16		TBD	Call TI	Call TI
SNJ55ALS194W	OBSOLETE	CFP	W	16		TBD	Call TI	Call TI

[1] The marketing status values are defined as follows:
ACTIVE: Product device recommended for new designs.
LIFEBUY: TI has announced that the device will be discontinued, and a lifetime-buy period is in effect.
NRND: Not recommended for new designs. Device is in production to support existing customers, but TI does not recommend using this part in a new design.
PREVIEW: Device has been announced but is not in production. Samples may or may not be available.
OBSOLETE: TI has discontinued the production of the device.

[2] Eco Plan - The planned eco-friendly classification: Pb-Free (RoHS), Pb-Free (RoHS Exempt), or Green (RoHS & no Sb/Br) - please check http://www.ti.com/productcontent for the latest availability information and additional product content details.
TBD: The Pb-Free/Green conversion plan has not been defined.
Pb-Free (RoHS): TI's terms "Lead-Free" or "Pb-Free" mean semiconductor products that are compatible with the current RoHS requirements for all 6 substances, including the requirement that lead not exceed 0.1% by weight in homogeneous materials. Where designed to be soldered at high temperatures, TI Pb-Free products are suitable for use in specified lead-free processes.
Pb-Free (RoHS Exempt): This component has a RoHS exemption for either 1) lead-based flip-chip solder bumps used between the die and package, or 2) lead-based die adhesive used between the die and leadframe. The component is otherwise considered Pb-Free (RoHS compatible) as defined above.
Green (RoHS & no Sb/Br): TI defines "Green" to mean Pb-Free (RoHS compatible), and free of Bromine (Br) and Antimony (Sb) based flame retardants (Br or Sb do not exceed 0.1% by weight in homogeneous material)

[3] MSL, Peak Temp. -- The Moisture Sensitivity Level rating according to the JEDEC industry standard classifications, and peak solder temperature.

Important Information and Disclaimer: The information provided on this page represents TI's knowledge and belief as of the date that it is provided. TI bases its knowledge and belief on information provided by third parties, and makes no representation or warranty as to the accuracy of such information. Efforts are underway to better integrate information from third parties. TI has taken and continues to take

reasonable steps to provide representative and accurate information but may not have conducted destructive testing or chemical analysis on incoming materials and chemicals. TI and TI suppliers consider certain information to be proprietary, and thus CAS numbers and other limited information may not be available for release.

In no event shall TI's liability arising out of such information exceed the total purchase price of the TI part(s) at issue in this document sold by TI to Customer on an annual basis.

TAPE AND REEL INFORMATION

REEL DIMENSIONS

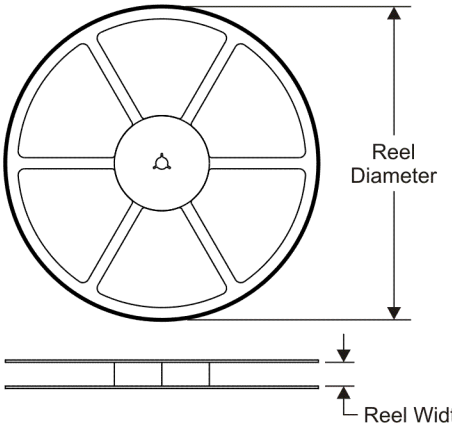

TAPE DIMENSIONS

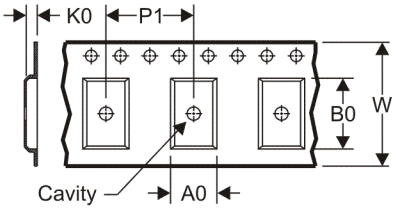

A0	Dimension designed to accommodate the component width
B0	Dimension designed to accommodate the component length
K0	Dimension designed to accommodate the component thickness
W	Overall width of the carrier tape
P1	Pitch between successive cavity centers

QUADRANT ASSIGNMENTS FOR PIN 1 ORIENTATION IN TAPE

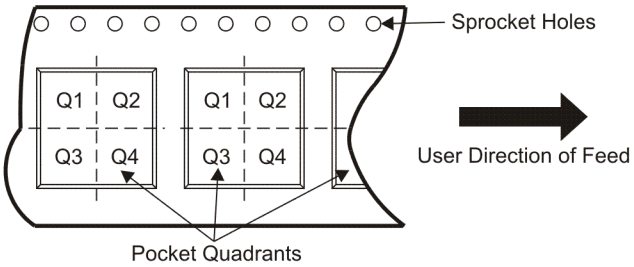

*All dimensions are nominal

Device	Package Type	Package Drawing	Pins	SPQ	Reel Diameter (mm)	Reel Width W1 (mm)	A0 (mm)	B0 (mm)	K0 (mm)	P1 (mm)	W (mm)	Pin1 Quadrant
SN75ALS194DR	SOIC	D	16	2500	330.0	16.4	6.5	10.3	2.1	8.0	16.0	Q1
SN75ALS194NSR	SO	NS	16	2000	330.0	16.4	8.2	10.5	2.5	12.0	16.0	Q1

TAPE AND REEL BOX DIMENSIONS

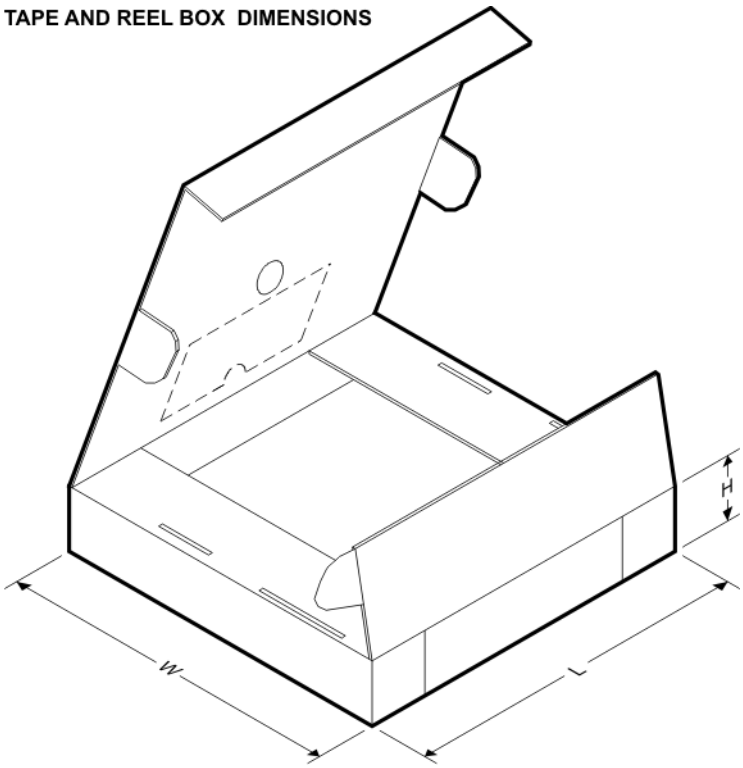

*All dimensions are nominal

Device	Package Type	Package Drawing	Pins	SPQ	Length (mm)	Width (mm)	Height (mm)
SN75ALS194DR	SOIC	D	16	2500	333.2	345.9	28.6
SN75ALS194NSR	SO	NS	16	2000	346.0	346.0	33.0

J (R–GDIP–T**) CERAMIC DUAL IN–LINE PACKAGE

14 LEADS SHOWN

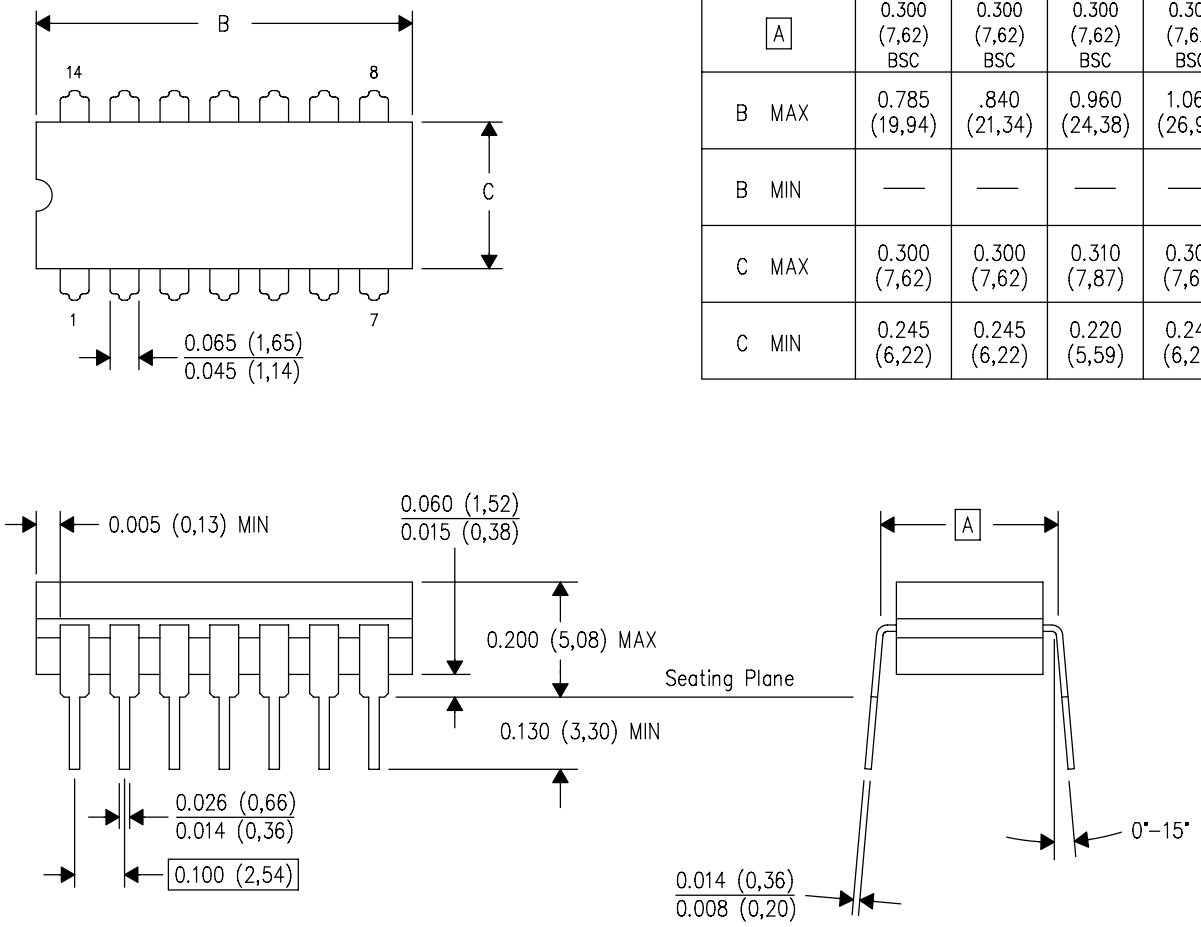

DIM \ PINS **	14	16	18	20
A	0.300 (7,62) BSC	0.300 (7,62) BSC	0.300 (7,62) BSC	0.300 (7,62) BSC
B MAX	0.785 (19,94)	.840 (21,34)	0.960 (24,38)	1.060 (26,92)
B MIN	—	—	—	—
C MAX	0.300 (7,62)	0.300 (7,62)	0.310 (7,87)	0.300 (7,62)
C MIN	0.245 (6,22)	0.245 (6,22)	0.220 (5,59)	0.245 (6,22)

4040083/F 03/03

NOTES:
- A. All linear dimensions are in inches (millimeters).
- B. This drawing is subject to change without notice.
- C. This package is hermetically sealed with a ceramic lid using glass frit.
- D. Index point is provided on cap for terminal identification only on press ceramic glass frit seal only.
- E. Falls within MIL STD 1835 GDIP1–T14, GDIP1–T16, GDIP1–T18 and GDIP1–T20.

FK (S-CQCC-N**)

LEADLESS CERAMIC CHIP CARRIER

28 TERMINAL SHOWN

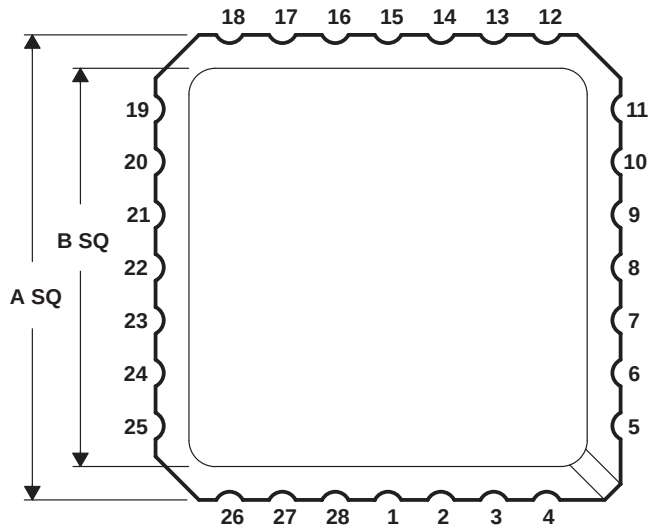

NO. OF TERMINALS **	A		B	
	MIN	MAX	MIN	MAX
20	0.342 (8,69)	0.358 (9,09)	0.307 (7,80)	0.358 (9,09)
28	0.442 (11,23)	0.458 (11,63)	0.406 (10,31)	0.458 (11,63)
44	0.640 (16,26)	0.660 (16,76)	0.495 (12,58)	0.560 (14,22)
52	0.739 (18,78)	0.761 (19,32)	0.495 (12,58)	0.560 (14,22)
68	0.938 (23,83)	0.962 (24,43)	0.850 (21,6)	0.858 (21,8)
84	1.141 (28,99)	1.165 (29,59)	1.047 (26,6)	1.063 (27,0)

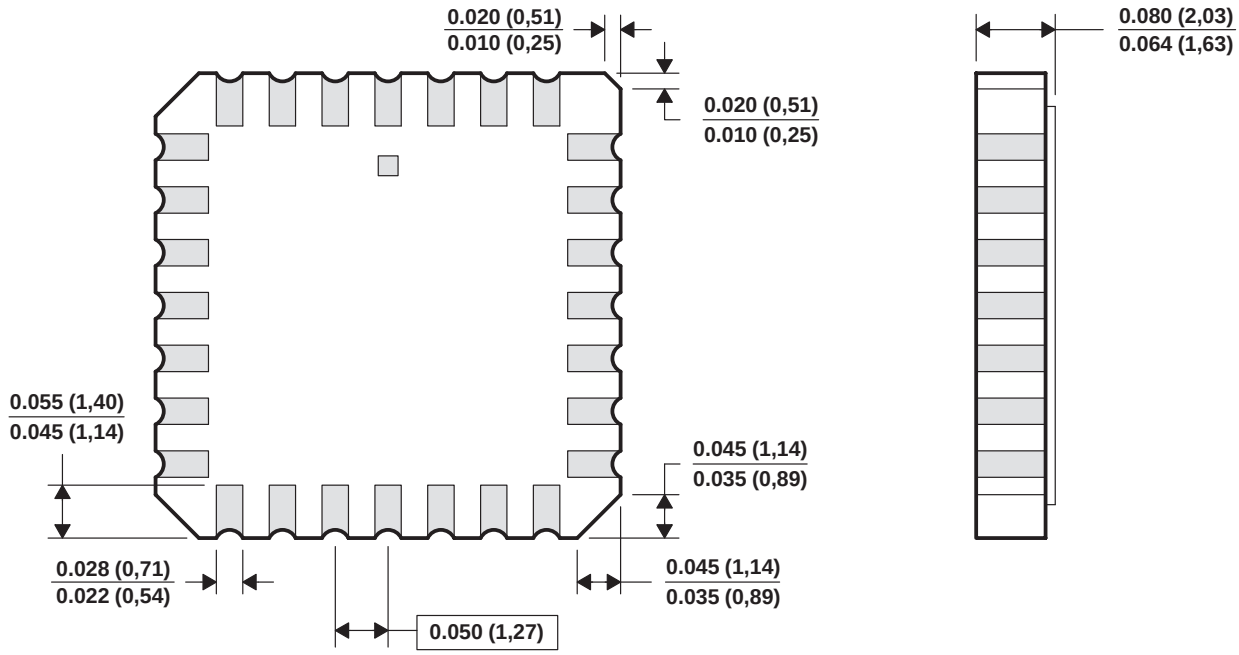

4040140/D 10/96

NOTES:
A. All linear dimensions are in inches (millimeters).
B. This drawing is subject to change without notice.
C. This package can be hermetically sealed with a metal lid.
D. The terminals are gold plated.
E. Falls within JEDEC MS-004

MECHANICAL DATA

NS (R-PDSO-G)** **PLASTIC SMALL-OUTLINE PACKAGE**

14-PINS SHOWN

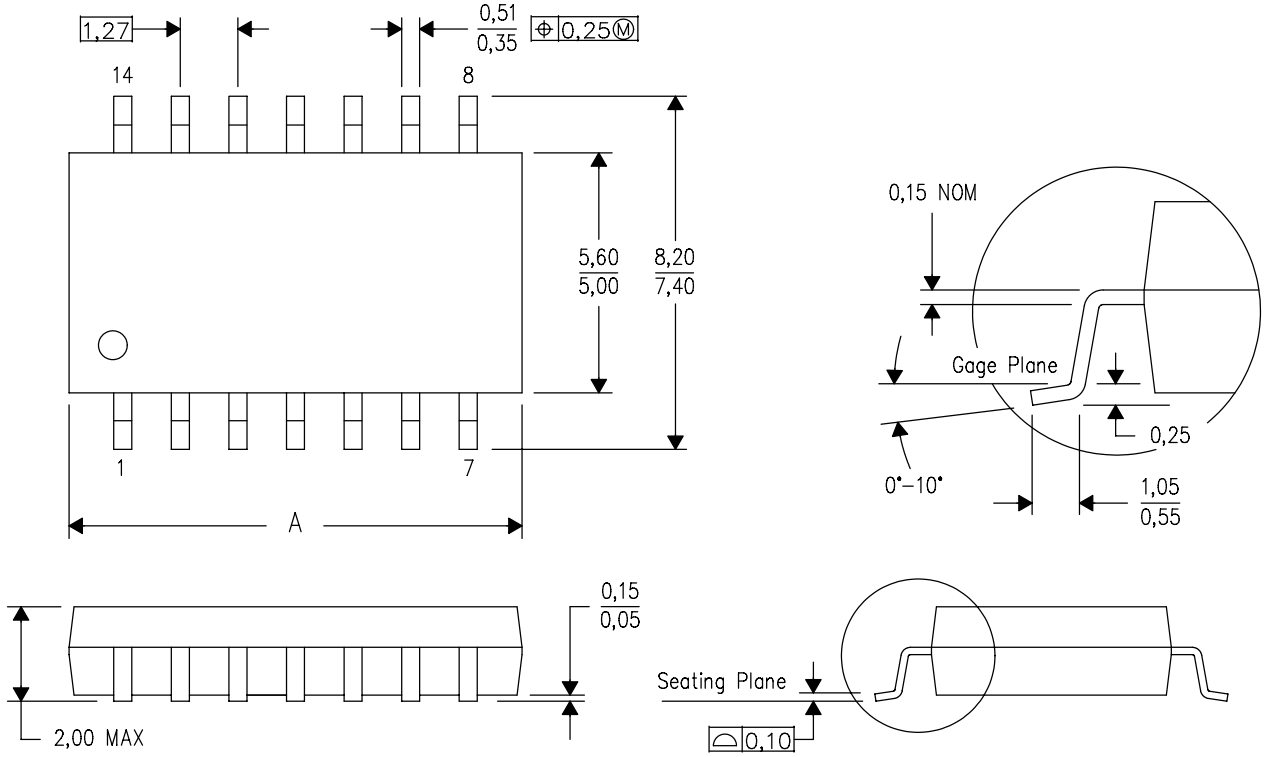

DIM \ PINS **	14	16	20	24
A MAX	10,50	10,50	12,90	15,30
A MIN	9,90	9,90	12,30	14,70

4040062/C 03/03

NOTES:
A. All linear dimensions are in millimeters.
B. This drawing is subject to change without notice.
C. Body dimensions do not include mold flash or protrusion, not to exceed 0,15.

W (R–GDFP–F16) CERAMIC DUAL FLATPACK

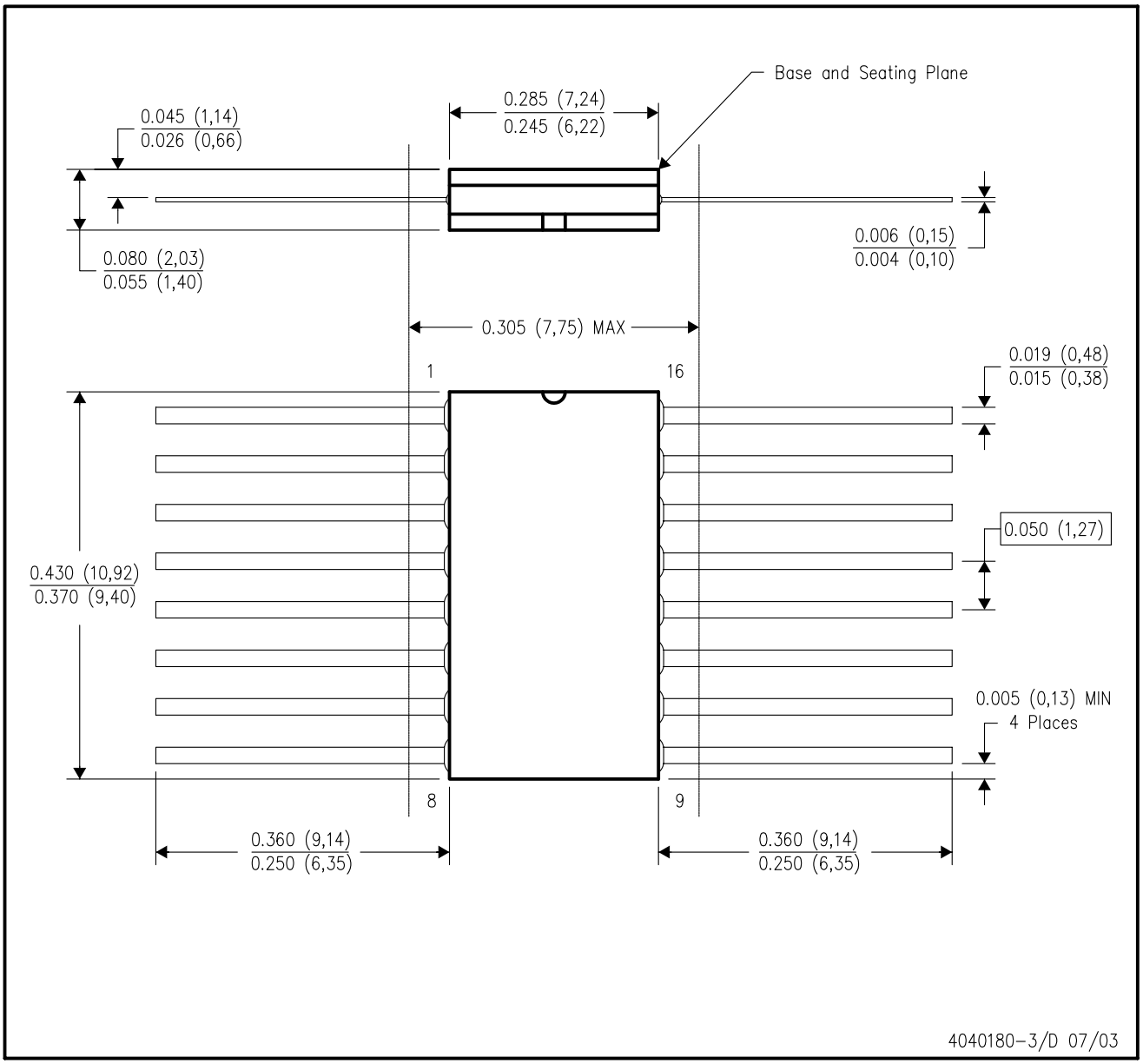

NOTES:
A. All linear dimensions are in inches (millimeters).
B. This drawing is subject to change without notice.
C. This package can be hermetically sealed with a ceramic lid using glass frit.
D. Index point is provided on cap for terminal identification only.
E. Falls within MIL STD 1835 GDFP1–F16 and JEDEC MO–092AC

D (R–PDSO–G16) PLASTIC SMALL–OUTLINE PACKAGE

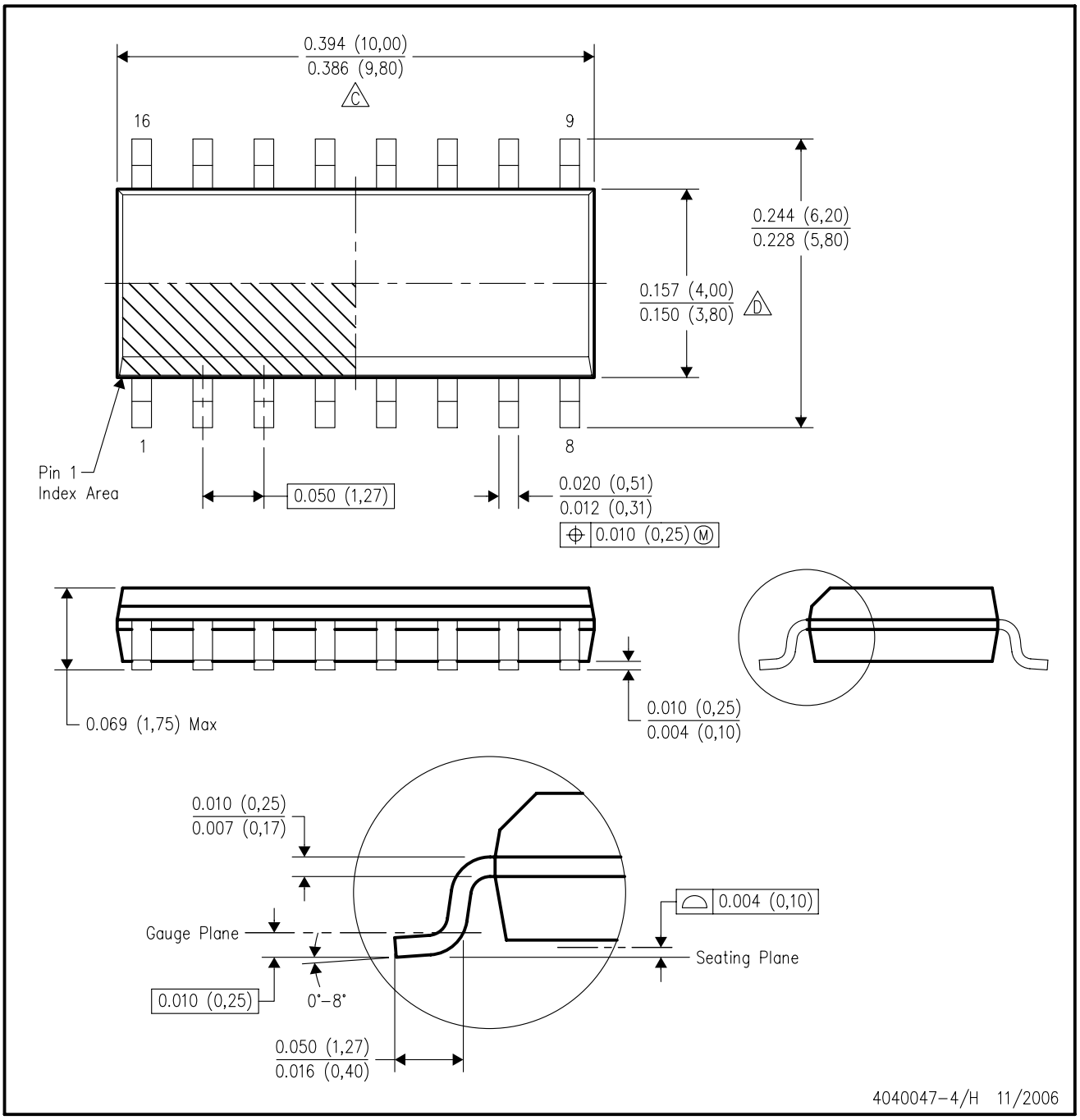

NOTES:
- A. All linear dimensions are in inches (millimeters).
- B. This drawing is subject to change without notice.
- C. Body length does not include mold flash, protrusions, or gate burrs. Mold flash, protrusions, or gate burrs shall not exceed .006 (0,15) per end.
- D. Body width does not include interlead flash. Interlead flash shall not exceed .017 (0,43) per side.
- E. Reference JEDEC MS–012 variation AC.

N (R–PDIP–T**) PLASTIC DUAL–IN–LINE PACKAGE

16 PINS SHOWN

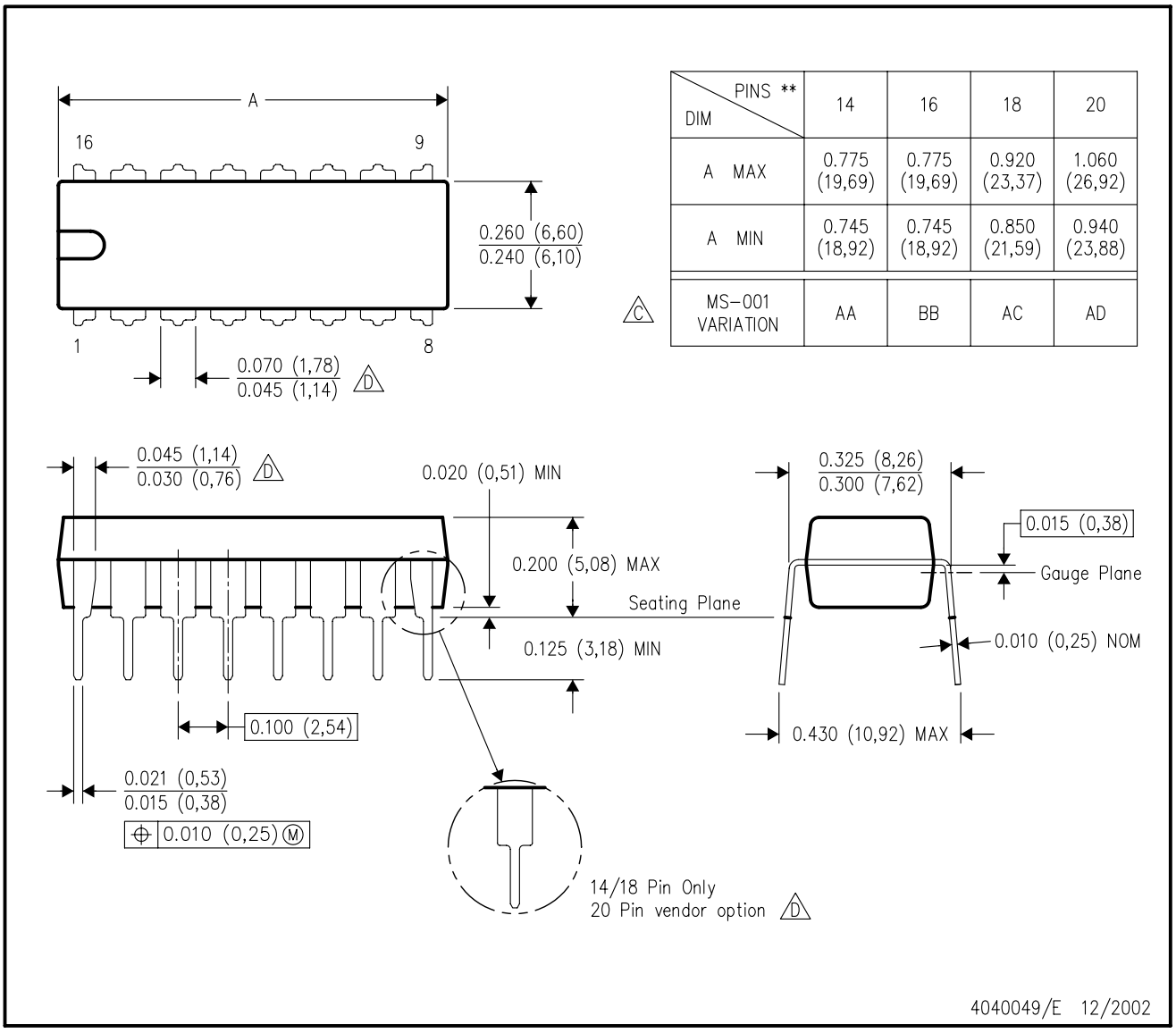

DIM \ PINS **	14	16	18	20
A MAX	0.775 (19,69)	0.775 (19,69)	0.920 (23,37)	1.060 (26,92)
A MIN	0.745 (18,92)	0.745 (18,92)	0.850 (21,59)	0.940 (23,88)
MS–001 VARIATION (C)	AA	BB	AC	AD

NOTES:
A. All linear dimensions are in inches (millimeters).
B. This drawing is subject to change without notice.
C. Falls within JEDEC MS–001, except 18 and 20 pin minimum body length (Dim A).
D. The 20 pin end lead shoulder width is a vendor option, either half or full width.

IMPORTANT NOTICE

Texas Instruments Incorporated and its subsidiaries (TI) reserve the right to make corrections, modifications, enhancements, improvements, and other changes to its products and services at any time and to discontinue any product or service without notice. Customers should obtain the latest relevant information before placing orders and should verify that such information is current and complete. All products are sold subject to TI's terms and conditions of sale supplied at the time of order acknowledgment.

TI warrants performance of its hardware products to the specifications applicable at the time of sale in accordance with TI's standard warranty. Testing and other quality control techniques are used to the extent TI deems necessary to support this warranty. Except where mandated by government requirements, testing of all parameters of each product is not necessarily performed.

TI assumes no liability for applications assistance or customer product design. Customers are responsible for their products and applications using TI components. To minimize the risks associated with customer products and applications, customers should provide adequate design and operating safeguards.

TI does not warrant or represent that any license, either express or implied, is granted under any TI patent right, copyright, mask work right, or other TI intellectual property right relating to any combination, machine, or process in which TI products or services are used. Information published by TI regarding third-party products or services does not constitute a license from TI to use such products or services or a warranty or endorsement thereof. Use of such information may require a license from a third party under the patents or other intellectual property of the third party, or a license from TI under the patents or other intellectual property of TI.

Reproduction of TI information in TI data books or data sheets is permissible only if reproduction is without alteration and is accompanied by all associated warranties, conditions, limitations, and notices. Reproduction of this information with alteration is an unfair and deceptive business practice. TI is not responsible or liable for such altered documentation. Information of third parties may be subject to additional restrictions.

Resale of TI products or services with statements different from or beyond the parameters stated by TI for that product or service voids all express and any implied warranties for the associated TI product or service and is an unfair and deceptive business practice. TI is not responsible or liable for any such statements.

TI products are not authorized for use in safety-critical applications (such as life support) where a failure of the TI product would reasonably be expected to cause severe personal injury or death, unless officers of the parties have executed an agreement specifically governing such use. Buyers represent that they have all necessary expertise in the safety and regulatory ramifications of their applications, and acknowledge and agree that they are solely responsible for all legal, regulatory and safety-related requirements concerning their products and any use of TI products in such safety-critical applications, notwithstanding any applications-related information or support that may be provided by TI. Further, Buyers must fully indemnify TI and its representatives against any damages arising out of the use of TI products in such safety-critical applications.

TI products are neither designed nor intended for use in military/aerospace applications or environments unless the TI products are specifically designated by TI as military-grade or "enhanced plastic." Only products designated by TI as military-grade meet military specifications. Buyers acknowledge and agree that any such use of TI products which TI has not designated as military-grade is solely at the Buyer's risk, and that they are solely responsible for compliance with all legal and regulatory requirements in connection with such use.

TI products are neither designed nor intended for use in automotive applications or environments unless the specific TI products are designated by TI as compliant with ISO/TS 16949 requirements. Buyers acknowledge and agree that, if they use any non-designated products in automotive applications, TI will not be responsible for any failure to meet such requirements.

Following are URLs where you can obtain information on other Texas Instruments products and application solutions:

Products		**Applications**	
Amplifiers	amplifier.ti.com	Audio	www.ti.com/audio
Data Converters	dataconverter.ti.com	Automotive	www.ti.com/automotive
DSP	dsp.ti.com	Broadband	www.ti.com/broadband
Clocks and Timers	www.ti.com/clocks	Digital Control	www.ti.com/digitalcontrol
Interface	interface.ti.com	Medical	www.ti.com/medical
Logic	logic.ti.com	Military	www.ti.com/military
Power Mgmt	power.ti.com	Optical Networking	www.ti.com/opticalnetwork
Microcontrollers	microcontroller.ti.com	Security	www.ti.com/security
RFID	www.ti-rfid.com	Telephony	www.ti.com/telephony
RF/IF and ZigBee® Solutions	www.ti.com/lprf	Video & Imaging	www.ti.com/video
		Wireless	www.ti.com/wireless

Mailing Address: Texas Instruments, Post Office Box 655303, Dallas, Texas 75265
Copyright © 2008, Texas Instruments Incorporated