- **Member of the Texas Instruments Widebus™ Family**
- **Operates From 1.65 V to 3.6 V**
- **Inputs Accept Voltages to 5.5 V**
- **Max t_{pd} of 4.8 ns at 3.3 V**
- **Typical V_{OLP} (Output Ground Bounce) <0.8 V at V_{CC} = 3.3 V, T_A = 25°C**
- **Typical V_{OHV} (Output V_{OH} Undershoot) >2 V at V_{CC} = 3.3 V, T_A = 25°C**
- **Supports Mixed-Mode Signal Operation on All Ports (5-V Input/Output Voltage With 3.3-V V_{CC})**
- **Bus Hold on Data Inputs Eliminates the Need for External Pullup/Pulldown Resistors**
- **All Outputs Have Equivalent 26-Ω Series Resistors, So No External Resistors Are Required**
- **I_{off} Supports Partial-Power-Down Mode Operation**
- **Latch-Up Performance Exceeds 250 mA Per JESD 17**
- **ESD Protection Exceeds JESD 22**
  - **2000-V Human-Body Model (A114-A)**
  - **200-V Machine Model (A115-A)**

DGG, DGV, OR DL PACKAGE
(TOP VIEW)

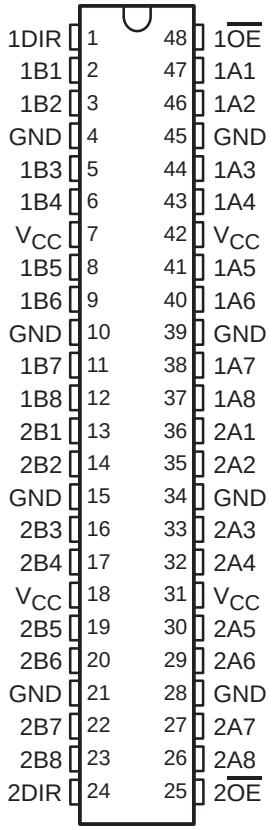

description/ordering information

This 16-bit (dual-octal) noninverting bus transceiver is designed for 1.65-V to 3.6-V V_{CC} operation.

The SN74LVCHR16245A is designed for asynchronous communication between data buses. The control-function implementation minimizes external-timing requirements.

This device can be used as two 8-bit transceivers or one 16-bit transceiver. It allows data transmission from the A bus to the B bus or from the B bus to the A bus, depending on the logic level at the direction-control (DIR) input. The output-enable ($\overline{OE}$) input can disable the device so that the buses effectively are isolated.

ORDERING INFORMATION

T_A	PACKAGE†		ORDERABLE PART NUMBER	TOP-SIDE MARKING
−40°C to 85°C	SSOP − DL	Tape and reel	SN74LVCHR16245ALR	LVCHR16245A
	TSSOP − DGG	Tape and reel	SN74LVCHR16245AGR	LVCHR16245A
	TVSOP − DGV	Tape and reel	SN74LVCHR16245AVR	LDR245A
	VFBGA − GQL	Tape and reel	SN74LVCHR16245AKR	LR245A
	VFBGA − ZQL (Pb-free)		74LVCHR16245AZQLR	

† Package drawings, standard packing quantities, thermal data, symbolization, and PCB design guidelines are available at www.ti.com/sc/package.

Please be aware that an important notice concerning availability, standard warranty, and use in critical applications of Texas Instruments semiconductor products and disclaimers thereto appears at the end of this data sheet.

Widebus is a trademark of Texas Instruments.

PRODUCTION DATA information is current as of publication date. Products conform to specifications per the terms of Texas Instruments standard warranty. Production processing does not necessarily include testing of all parameters.

Copyright © 2003, Texas Instruments Incorporated

description/ordering information (continued)

All outputs, which are designed to sink up to 12 mA, include equivalent 26-Ω series resistors to reduce overshoot and undershoot.

Inputs can be driven from either 3.3-V or 5-V devices. This feature allows the use of this device as a translator in a mixed 3.3-V/5-V system environment.

To ensure the high-impedance state during power up or power down, $\overline{OE}$ should be tied to V_{CC} through a pullup resistor; the minimum value of the resistor is determined by the current-sinking capability of the driver.

This device is fully specified for partial-power-down applications using I_{off}. The I_{off} circuitry disables the outputs, preventing damaging current backflow through the device when it is powered down.

Active bus-hold circuitry is provided to hold unused or floating data inputs at a valid logic level. Use of pullup or pulldown resistors with the bus-hold circuitry is not recommended. The bus-hold circuitry is part of the input circuit and is not disabled by $\overline{OE}$ or DIR.

GQL OR ZQL PACKAGE
(TOP VIEW)

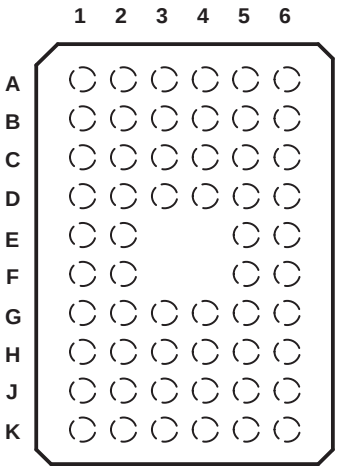

terminal assignments

	1	2	3	4	5	6
A	1DIR	NC	NC	NC	NC	1$\overline{OE}$
B	1B2	1B1	GND	GND	1A1	1A2
C	1B4	1B3	V_{CC}	V_{CC}	1A3	1A4
D	1B6	1B5	GND	GND	1A5	1A6
E	1B8	1B7			1A7	1A8
F	2B1	2B2			2A2	2A1
G	2B3	2B4	GND	GND	2A4	2A3
H	2B5	2B6	V_{CC}	V_{CC}	2A6	2A5
J	2B7	2B8	GND	GND	2A8	2A7
K	2DIR	NC	NC	NC	NC	2$\overline{OE}$

NC − No internal connection

FUNCTION TABLE
(each 8-bit section)

INPUTS		OPERATION
$\overline{OE}$	DIR	
L	L	B data to A bus
L	H	A data to B bus
H	X	Isolation

logic diagram (positive logic)

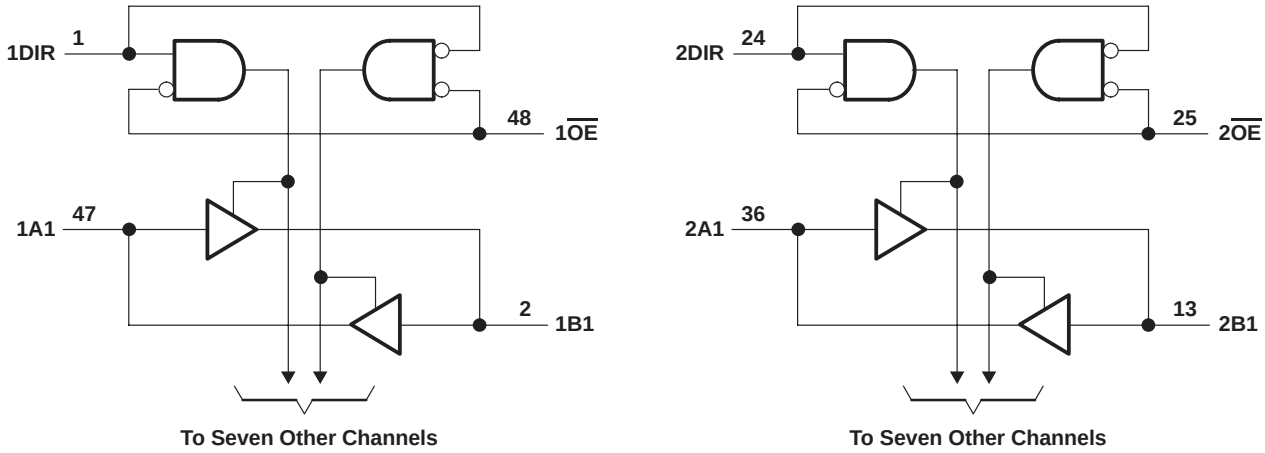

Pin numbers shown are for the DGG, DGV, and DL packages.

absolute maximum ratings over operating free-air temperature range (unless otherwise noted)†

Supply voltage range, V_{CC}	−0.5 V to 6.5 V
Input voltage range, V_I (see Note 1)	−0.5 V to 6.5 V
Voltage range applied to any output in the high-impedance or power-off state, V_O (see Note 1)	−0.5 V to 6.5 V
Voltage range applied to any output in the high or low state, V_O (see Notes 1 and 2)	−0.5 V to V_{CC} + 0.5 V
Input clamp current, I_{IK} (V_I < 0)	−50 mA
Output clamp current, I_{OK} (V_O < 0)	−50 mA
Continuous output current, I_O	±50 mA
Continuous current through each V_{CC} or GND	±100 mA
Package thermal impedance, θ_{JA} (see Note 3): DGG package	70°C/W
DGV package	58°C/W
DL package	63°C/W
GQL/ZQL package	42°C/W
Storage temperature range, T_{stg}	−65°C to 150°C

† Stresses beyond those listed under “absolute maximum ratings” may cause permanent damage to the device. These are stress ratings only, and functional operation of the device at these or any other conditions beyond those indicated under “recommended operating conditions” is not implied. Exposure to absolute-maximum-rated conditions for extended periods may affect device reliability.

NOTES:
1. The input negative-voltage and output voltage ratings may be exceeded if the input and output current ratings are observed.
2. The value of V_{CC} is provided in the recommended operating conditions table.
3. The package thermal impedance is calculated in accordance with JESD 51-7.

recommended operating conditions (see Note 4)

			MIN	MAX	UNIT
V_{CC}	Supply voltage	Operating	1.65	3.6	V
		Data retention only	1.5		
V_{IH}	High-level input voltage	V_{CC} = 1.65 V to 1.95 V	$0.65 \times V_{CC}$		V
		V_{CC} = 2.3 V to 2.7 V	1.7		
		V_{CC} = 2.7 V to 3.6 V	2		
V_{IL}	Low-level input voltage	V_{CC} = 1.65 V to 1.95 V		$0.35 \times V_{CC}$	V
		V_{CC} = 2.3 V to 2.7 V		0.7	
		V_{CC} = 2.7 V to 3.6 V		0.8	
V_I	Input voltage		0	5.5	V
V_O	Output voltage	High or low state	0	V_{CC}	V
		3-state	0	5.5	
I_{OH}	High-level output current	V_{CC} = 1.65 V		−2	mA
		V_{CC} = 2.3 V		−4	
		V_{CC} = 2.7 V		−8	
		V_{CC} = 3 V		−12	
I_{OL}	Low-level output current	V_{CC} = 1.65 V		2	mA
		V_{CC} = 2.3 V		4	
		V_{CC} = 2.7 V		8	
		V_{CC} = 3 V		12	
$\Delta t/\Delta v$	Input transition rise or fall rate			10	ns/V
T_A	Operating free-air temperature		−40	85	°C

NOTE 4: All unused control inputs of the device must be held at V_{CC} or GND to ensure proper device operation. Refer to the TI application report, *Implications of Slow or Floating CMOS Inputs*, literature number SCBA004.

electrical characteristics over recommended operating free-air temperature range (unless otherwise noted)

PARAMETER		TEST CONDITIONS	V_{CC}	MIN	TYP†	MAX	UNIT
V_{OH}		I_{OH} = −100 µA	1.65 V to 3.6 V	V_{CC}−0.2			V
		I_{OH} = −2 mA	1.65 V	1.2			
		I_{OH} = −4 mA	2.3 V	1.7			
			2.7 V	2.2			
		I_{OH} = −6 mA	3 V	2.4			
		I_{OH} = −8 mA	2.7 V	2			
		I_{OH} = −12 mA	3 V	2			
V_{OL}		I_{OL} = 100 µA	1.65 V to 3.6 V			0.2	V
		I_{OL} = 2 mA	1.65 V			0.45	
		I_{OL} = 4 mA	2.3 V			0.7	
			2.7 V			0.4	
		I_{OL} = 6 mA	3 V			0.55	
		I_{OL} = 8 mA	2.7 V			0.6	
		I_{OL} = 12 mA	3 V			0.8	
I_I	Control inputs	V_I = 0 to 5.5 V	3.6 V			±5	µA
$I_{I(hold)}$	A or B ports	V_I = 0.58 V	1.65 V	‡			µA
		V_I = 1.07 V		‡			
		V_I = 0.7 V	2.3 V	45			
		V_I = 1.7 V		−45			
		V_I = 0.8 V	3 V	75			
		V_I = 2 V		−75			
		V_I = 0 to 3.6 V§	3.6 V			±500	
I_{off}		V_I or V_O = 5.5 V	0			±10	µA
I_{OZ}¶		V_O = 0 V or (V_{CC} to 5.5 V)	2.3 V to 3.6 V			±5	µA
I_{CC}		V_I = V_{CC} or GND, I_O = 0	3.6 V			20	µA
		3.6 V ≤ V_I ≤ 5.5 V#, I_O = 0				20	
ΔI_{CC}		One input at V_{CC} − 0.6 V, Other inputs at V_{CC} or GND	2.7 V to 3.6 V			500	µA
C_i	Control inputs	V_I = V_{CC} or GND	3.3 V		3		pF
C_{io}	A or B ports	V_O = V_{CC} or GND	3.3 V		12		pF

† All typical values are at V_{CC} = 3.3 V, T_A = 25°C.
‡ This information was not available at the time of publication.
§ This is the bus-hold maximum dynamic current. It is the minimum overdrive current required to switch the input from one state to another.
¶ For the total leakage current in an I/O port, please consult the $I_{I(hold)}$ specification for the input voltage condition 0 V < V_I < V_{CC}, and the I_{OZ} specification for the input voltage conditions V_I = 0 V or V_I = V_{CC} to 5.5 V. The bus-hold current, at input voltages greater than V_{CC}, is negligible.
# This applies in the disabled state only.

switching characteristics over recommended operating free-air temperature range (unless otherwise noted) (see Figure 1)

PARAMETER	FROM (INPUT)	TO (OUTPUT)	V_{CC} = 1.8 V ± 0.15 V		V_{CC} = 2.5 V ± 0.2 V		V_{CC} = 2.7 V		V_{CC} = 3.3 V ± 0.3 V		UNIT
			MIN	MAX	MIN	MAX	MIN	MAX	MIN	MAX	
t_{pd}	A or B	B or A	1	12.5	1	9.5	1	5.7	1.5	4.8	ns
t_{en}	$\overline{OE}$	A or B	1	15.8	1	12.2	1	7.9	1.5	6.3	ns
t_{dis}	$\overline{OE}$	A or B	1	19.2	1	11.9	1	8.3	2.2	7.4	ns

operating characteristics, T_A = 25°C

PARAMETER			TEST CONDITIONS	V_{CC} = 1.8 V	V_{CC} = 2.5 V	V_{CC} = 3.3 V	UNIT
				TYP	TYP	TYP	
C_{pd}	Power dissipation capacitance per transceiver	Outputs enabled	f = 10 MHz	†	†	39	pF
		Outputs disabled		†	†	4	

† This information was not available at the time of publication.

PARAMETER MEASUREMENT INFORMATION

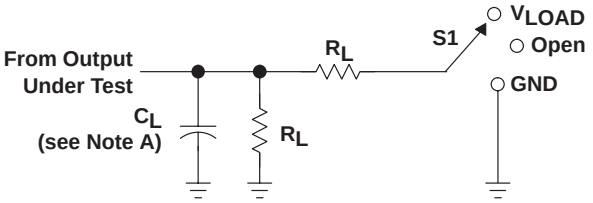

LOAD CIRCUIT

TEST	S1
t_{PLH}/t_{PHL}	Open
t_{PLZ}/t_{PZL}	V_{LOAD}
t_{PHZ}/t_{PZH}	GND

V_{CC}	INPUT		V_M	V_{LOAD}	C_L	R_L	V_Δ
	V_I	t_r/t_f					
1.8 V ± 0.15 V	V_{CC}	≤2 ns	$V_{CC}/2$	V_{CC}	30 pF	1 kΩ	0.15 V
2.5 V ± 0.2 V	V_{CC}	≤2 ns	$V_{CC}/2$	V_{CC}	30 pF	500 Ω	0.15 V
2.7 V	2.7 V	≤2.5 ns	1.5 V	6 V	50 pF	500 Ω	0.3 V
3.3 V ± 0.3 V	2.7 V	≤2.5 ns	1.5 V	6 V	50 pF	500 Ω	0.3 V

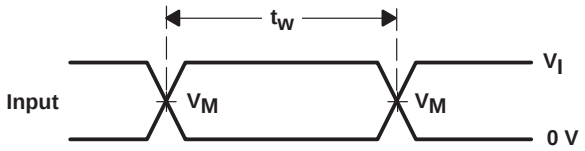

VOLTAGE WAVEFORMS
PULSE DURATION

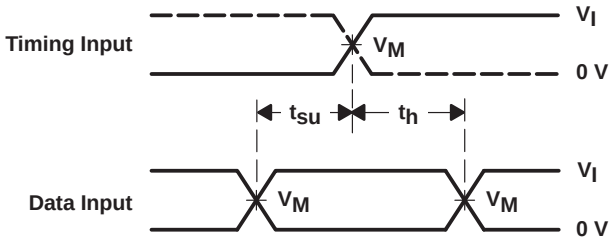

VOLTAGE WAVEFORMS
SETUP AND HOLD TIMES

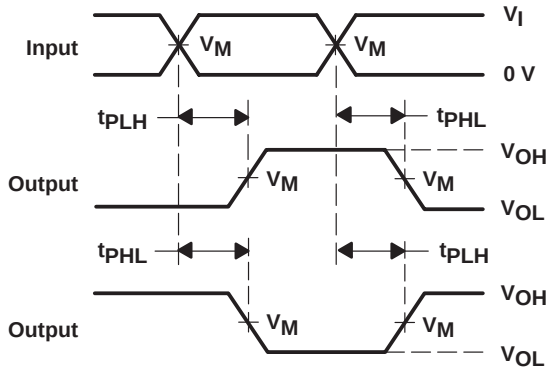

VOLTAGE WAVEFORMS
PROPAGATION DELAY TIMES
INVERTING AND NONINVERTING OUTPUTS

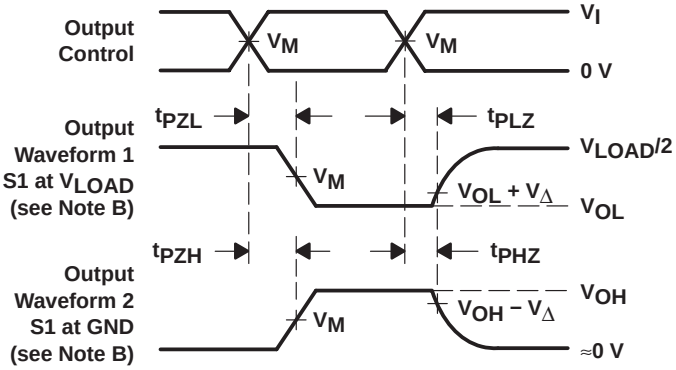

VOLTAGE WAVEFORMS
ENABLE AND DISABLE TIMES
LOW- AND HIGH-LEVEL ENABLING

NOTES: A. C_L includes probe and jig capacitance.
B. Waveform 1 is for an output with internal conditions such that the output is low except when disabled by the output control. Waveform 2 is for an output with internal conditions such that the output is high except when disabled by the output control.
C. All input pulses are supplied by generators having the following characteristics: PRR ≤ 10 MHz, Z_O = 50 Ω.
D. The outputs are measured one at a time with one transition per measurement.
E. t_{PLZ} and t_{PHZ} are the same as t_{dis}.
F. t_{PZL} and t_{PZH} are the same as t_{en}.
G. t_{PLH} and t_{PHL} are the same as t_{pd}.
H. All parameters and waveforms are not applicable to all devices.

Figure 1. Load Circuit and Voltage Waveforms

ZQL (R–PBGA–N56) PLASTIC BALL GRID ARRAY

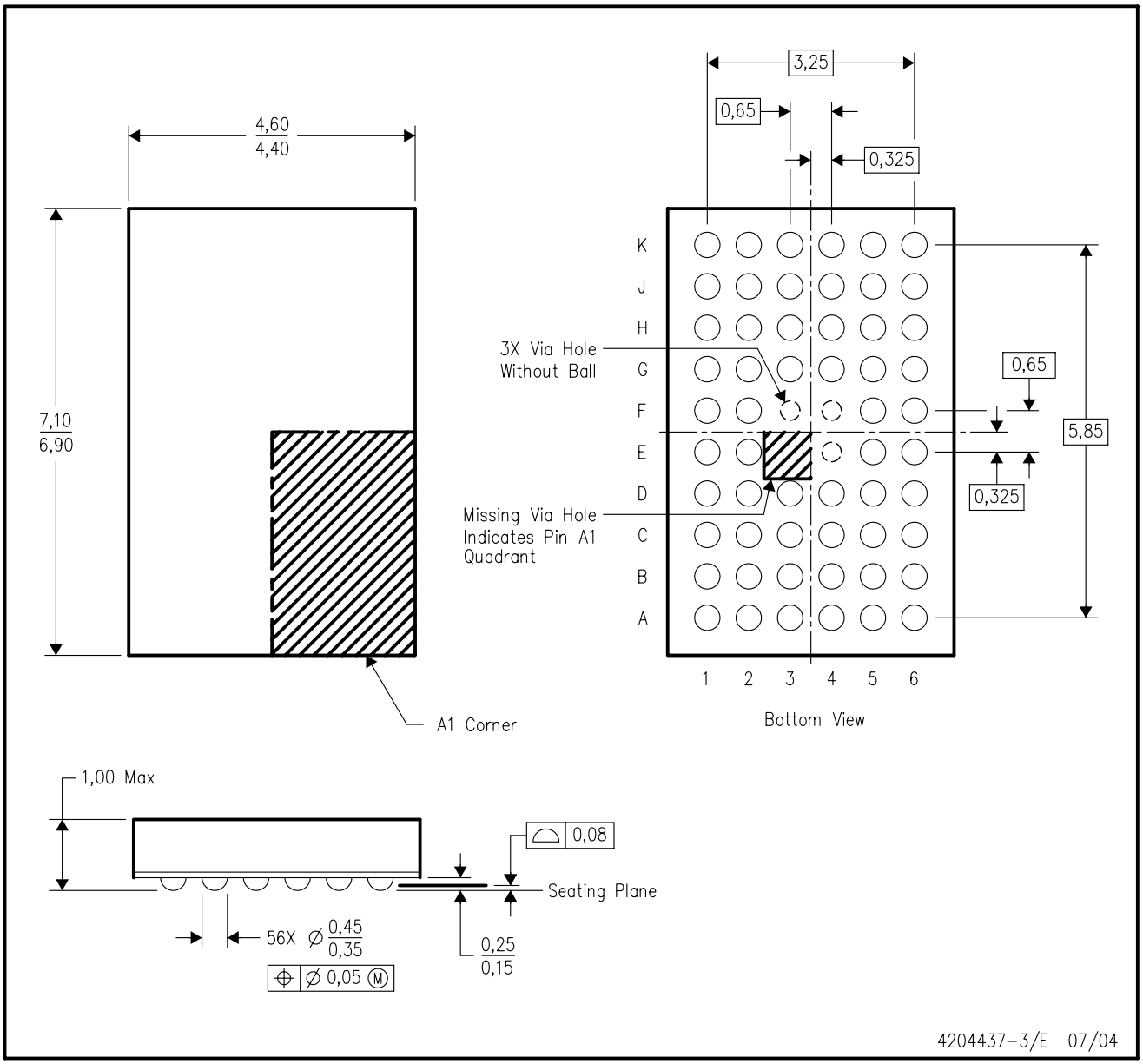

NOTES:
A. All linear dimensions are in millimeters.
B. This drawing is subject to change without notice.
C. Falls within JEDEC MO–225 variation BA.
D. This package is lead–free. Refer to the 56 GQL package (drawing 4200583) for tin–lead (SnPb).

DGV (R-PDSO-G)** **PLASTIC SMALL-OUTLINE**

24 PINS SHOWN

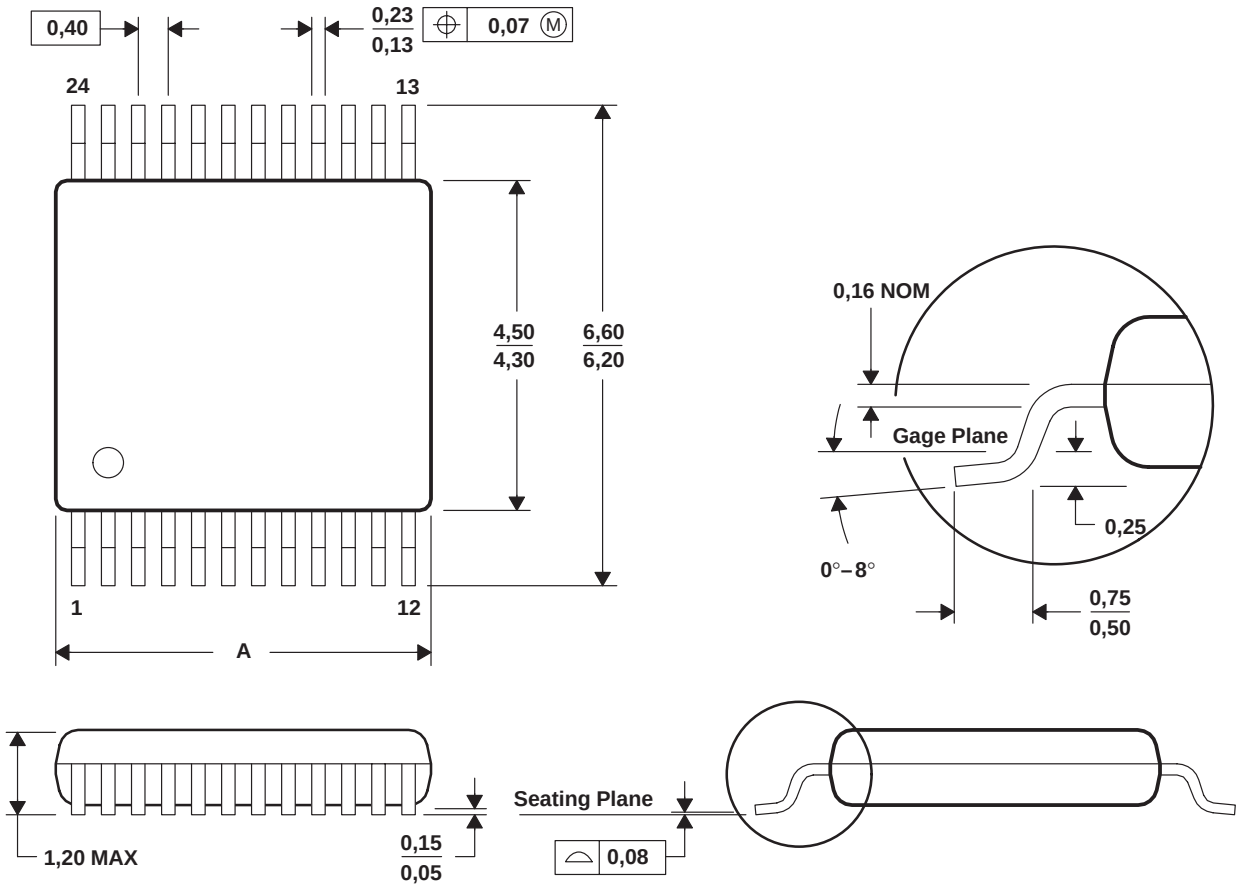

DIM \ PINS **	14	16	20	24	38	48	56
A MAX	3,70	3,70	5,10	5,10	7,90	9,80	11,40
A MIN	3,50	3,50	4,90	4,90	7,70	9,60	11,20

4073251/E 08/00

NOTES: A. All linear dimensions are in millimeters.
B. This drawing is subject to change without notice.
C. Body dimensions do not include mold flash or protrusion, not to exceed 0,15 per side.
D. Falls within JEDEC: 24/48 Pins – MO-153
14/16/20/56 Pins – MO-194

GQL (R–PBGA–N56) PLASTIC BALL GRID ARRAY

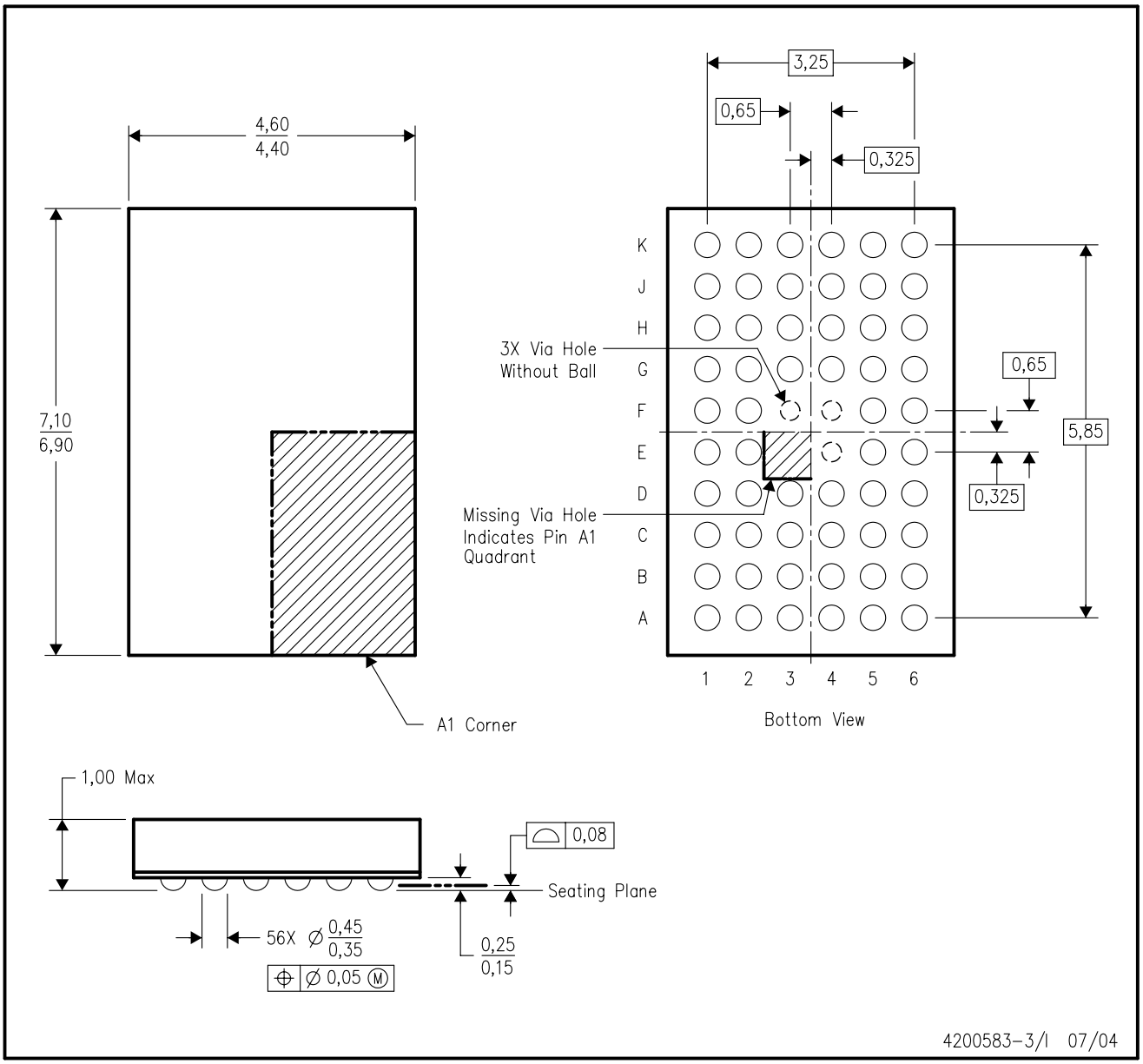

NOTES:
A. All linear dimensions are in millimeters.
B. This drawing is subject to change without notice.
C. Falls within JEDEC MO–225 variation BA.
D. This package is tin–lead (SnPb). Refer to the 56 ZQL package (drawing 4204437) for lead–free.

DL (R-PDSO-G)** **PLASTIC SMALL-OUTLINE PACKAGE**

48 PINS SHOWN

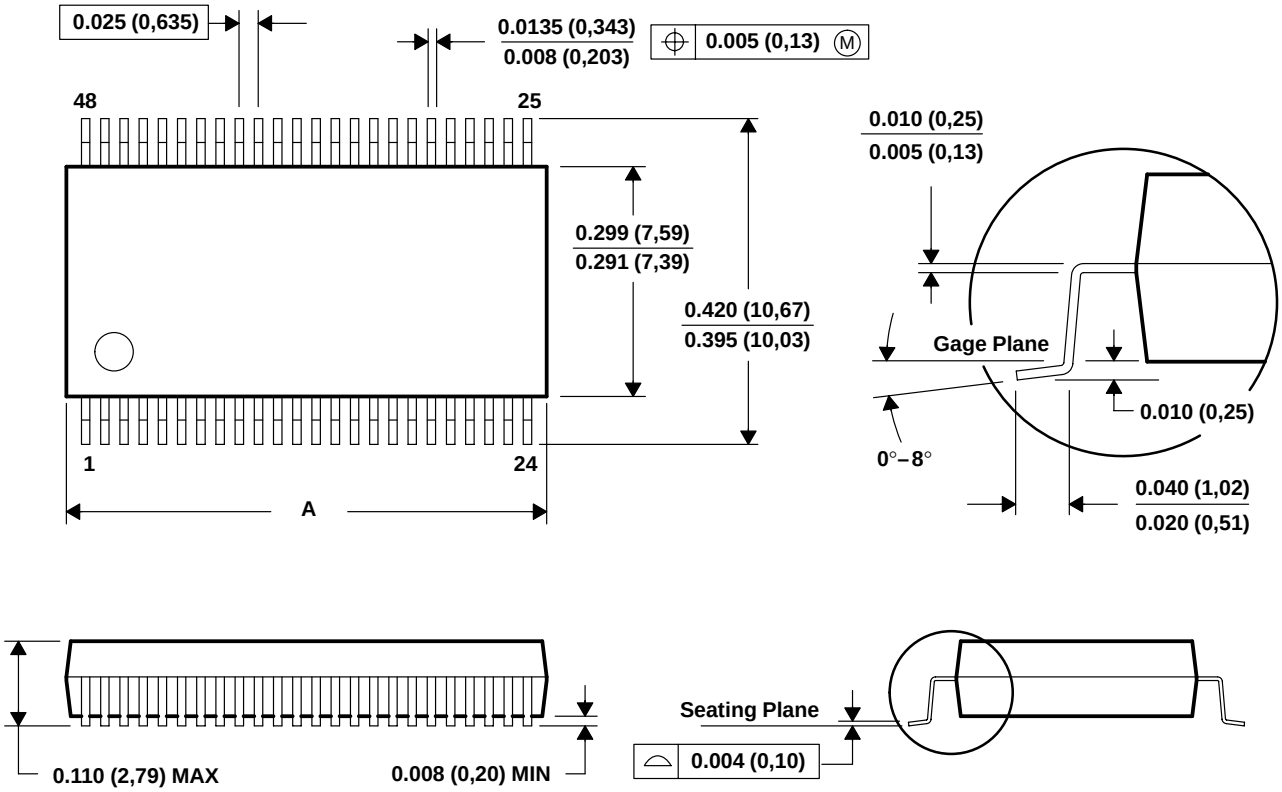

DIM \ PINS **	28	48	56
A MAX	0.380 (9,65)	0.630 (16,00)	0.730 (18,54)
A MIN	0.370 (9,40)	0.620 (15,75)	0.720 (18,29)

4040048/E 12/01

NOTES: A. All linear dimensions are in inches (millimeters).
B. This drawing is subject to change without notice.
C. Body dimensions do not include mold flash or protrusion not to exceed 0.006 (0,15).
D. Falls within JEDEC MO-118

DGG (R-PDSO-G)** **PLASTIC SMALL-OUTLINE PACKAGE**

48 PINS SHOWN

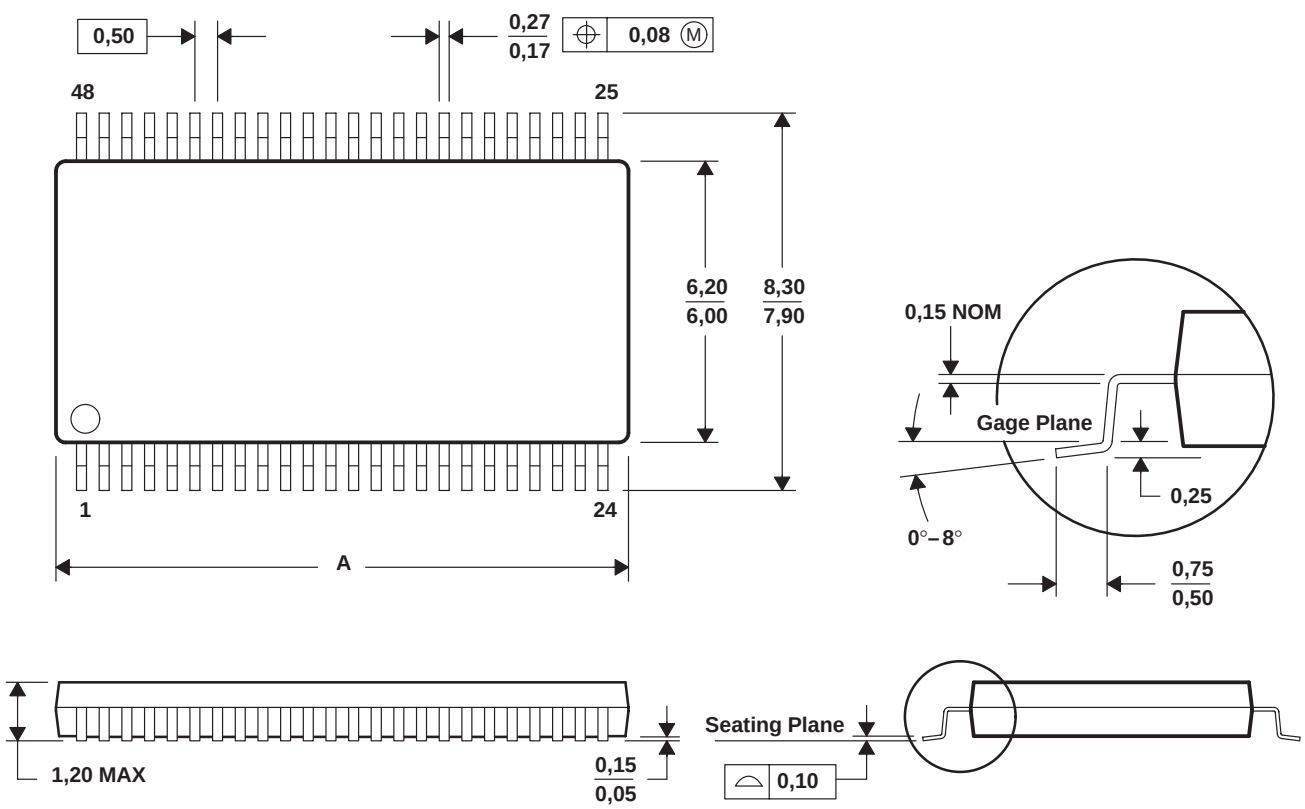

DIM \ PINS **	48	56	64
A MAX	12,60	14,10	17,10
A MIN	12,40	13,90	16,90

4040078/F 12/97

NOTES: A. All linear dimensions are in millimeters.
B. This drawing is subject to change without notice.
C. Body dimensions do not include mold protrusion not to exceed 0,15.
D. Falls within JEDEC MO-153

IMPORTANT NOTICE

Texas Instruments Incorporated and its subsidiaries (TI) reserve the right to make corrections, modifications, enhancements, improvements, and other changes to its products and services at any time and to discontinue any product or service without notice. Customers should obtain the latest relevant information before placing orders and should verify that such information is current and complete. All products are sold subject to TI's terms and conditions of sale supplied at the time of order acknowledgment.

TI warrants performance of its hardware products to the specifications applicable at the time of sale in accordance with TI's standard warranty. Testing and other quality control techniques are used to the extent TI deems necessary to support this warranty. Except where mandated by government requirements, testing of all parameters of each product is not necessarily performed.

TI assumes no liability for applications assistance or customer product design. Customers are responsible for their products and applications using TI components. To minimize the risks associated with customer products and applications, customers should provide adequate design and operating safeguards.

TI does not warrant or represent that any license, either express or implied, is granted under any TI patent right, copyright, mask work right, or other TI intellectual property right relating to any combination, machine, or process in which TI products or services are used. Information published by TI regarding third-party products or services does not constitute a license from TI to use such products or services or a warranty or endorsement thereof. Use of such information may require a license from a third party under the patents or other intellectual property of the third party, or a license from TI under the patents or other intellectual property of TI.

Reproduction of information in TI data books or data sheets is permissible only if reproduction is without alteration and is accompanied by all associated warranties, conditions, limitations, and notices. Reproduction of this information with alteration is an unfair and deceptive business practice. TI is not responsible or liable for such altered documentation.

Resale of TI products or services with statements different from or beyond the parameters stated by TI for that product or service voids all express and any implied warranties for the associated TI product or service and is an unfair and deceptive business practice. TI is not responsible or liable for any such statements.

Following are URLs where you can obtain information on other Texas Instruments products and application solutions:

Products		**Applications**	
Amplifiers	amplifier.ti.com	Audio	www.ti.com/audio
Data Converters	dataconverter.ti.com	Automotive	www.ti.com/automotive
DSP	dsp.ti.com	Broadband	www.ti.com/broadband
Interface	interface.ti.com	Digital Control	www.ti.com/digitalcontrol
Logic	logic.ti.com	Military	www.ti.com/military
Power Mgmt	power.ti.com	Optical Networking	www.ti.com/opticalnetwork
Microcontrollers	microcontroller.ti.com	Security	www.ti.com/security
		Telephony	www.ti.com/telephony
		Video & Imaging	www.ti.com/video
		Wireless	www.ti.com/wireless

Mailing Address: Texas Instruments
Post Office Box 655303 Dallas, Texas 75265

Copyright © 2004, Texas Instruments Incorporated