Distributed by:

JAMECO® ELECTRONICS

www.Jameco.com ✦ 1-800-831-4242

The content and copyrights of the attached material are the property of its owner.

Jameco Part Number 815921

SDLS145 – APRIL 1985 – REVISED MARCH 1988

- **Two-Way Asynchronous Communication Between Data Buses**
- **PNP Inputs Reduce D-C Loading**
- **Hysteresis (Typically 400 mV) at Inputs Improves Noise Margin**

SN54LS242, SN54LS243 . . . J OR W PACKAGE
SN74LS242, SN74LS243 . . . D OR N PACKAGE
(TOP VIEW)

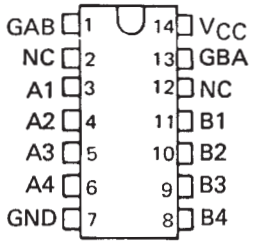

description

These four-data-line transceivers are designed for asynchronous two-way communications between data buses. The SN74LS′ can be used to drive terminated lines down to 133 ohms.

The SN54′ family is characterized for operation over the full military temperature range of −55°C to 125°C. The SN74′ family is characterized for operation from 0°C to 70°C.

SN54LS242, SN54LS243 . . . FK PACKAGE
(TOP VIEW)

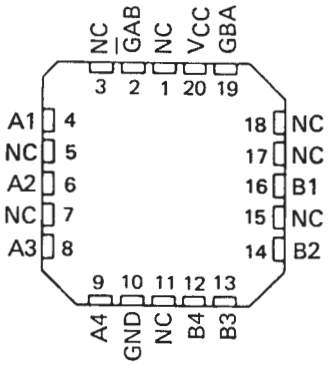

NC–No internal connection

FUNCTION TABLE (EACH TRANSCEIVER)

INPUTS		′LS242	′LS243
$\overline{G}$AB	GBA		
L	L	$\overline{A}$ to B	A to B
H	H	$\overline{B}$ to A	B to A
H	L	Isolation	Isolation
L	H	Latch A and B ($A = \overline{B}$)	Latch A and B ($A = B$)

schematics of inputs and outputs

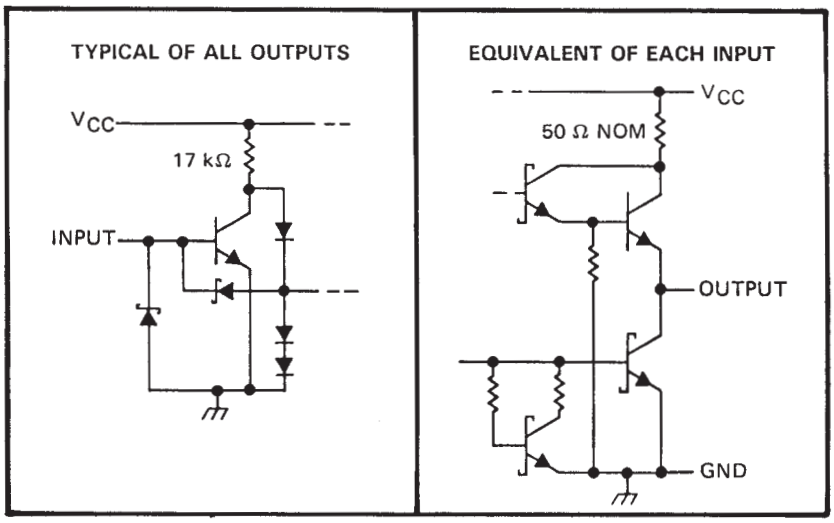

PRODUCTION DATA information is current as of publication date. Products conform to specifications per the terms of Texas Instruments standard warranty. Production processing does not necessarily include testing of all parameters.

Copyright © 1988, Texas Instruments Incorporated

logic symbols†

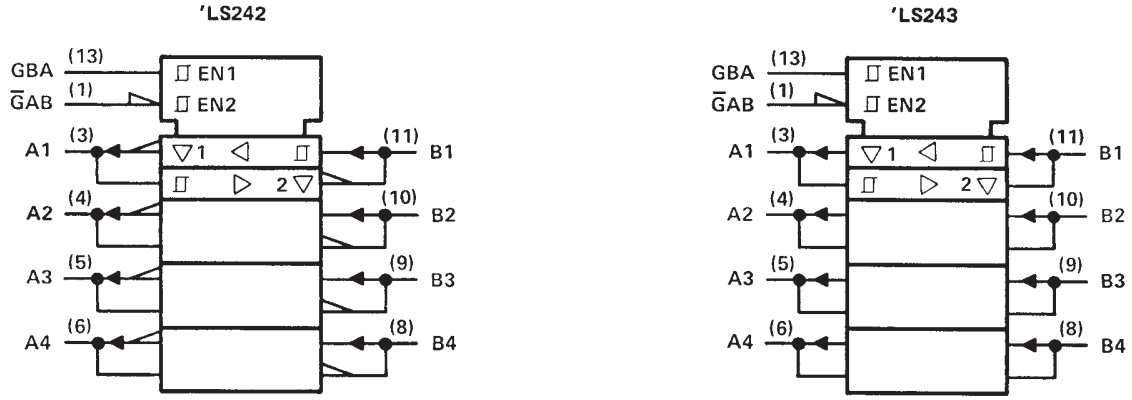

†These symbols are in accordance with ANSI/IEEE Std. 91-1984 and IEC Publication 617-12.

logic diagrams (positive logic)

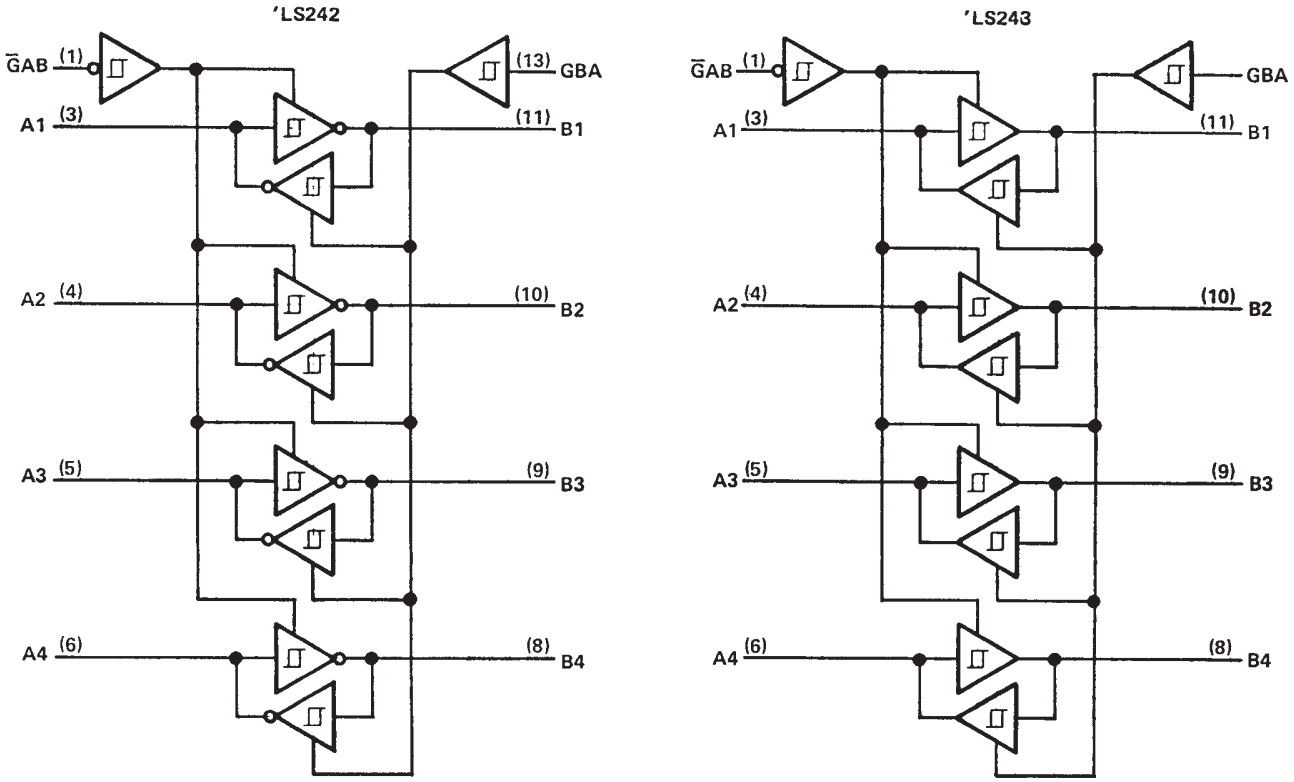

Pin numbers shown are for D, J, N, and W packages.

absolute maximum ratings over operating free-air temperature range (unless otherwise noted)

Supply voltage, V_{CC} (see Note 1)		7 V
Input voltage		7 V
Off-state output voltage		5.5 V
Operating free-air temperature range:	SN54LS'	−55°C to 125°C
	SN74LS'	0°C to 70°C
Storage temperature range		−65°C to 150°C

NOTE 1: Voltage values are with respect to network ground terminal.

recommended operating conditions

		SN54LS'			SN74LS'			UNIT
		MIN	NOM	MAX	MIN	NOM	MAX	
V_{CC}	Supply voltage, (see Note 1)	4.5	5	5.5	4.75	5	5.25	V
V_{IH}	High-level input voltage	2			2			V
V_{IL}	Low-level input voltage			0.7			0.8	V
I_{OH}	High-level output current			– 12			– 15	mA
I_{OL}	Low-level output current			12			24	mA
T_A	Operating free-air temperature	– 55		125	0		70	°C

electrical characteristics over recommended operating free-air temperature range (unless otherwise noted)

PARAMETER		TEST CONDITIONS†		SN54LS' MIN	SN54LS' TYP‡	SN54LS' MAX	SN74LS' MIN	SN74LS' TYP‡	SN74LS' MAX	UNIT
V_{IK}	A or B	V_{CC} = MIN, I_I = – 18 mA				– 1.5			– 1.5	V
Hysteresis ($V_{T+} - V_{T-}$)		V_{CC} = MIN		0.2	0.4		0.2	0.4		V
V_{OH}		V_{CC} = MIN, V_{IH} = 2 V, V_{IL} = MAX, I_{OH} = – 3 mA		2.4	3.1		2.4	3.1		V
		V_{CC} = MIN, V_{IH} = 2 V, V_{IL} = 0.5 V, I_{OH} = MAX		2			2			
V_{OL}		V_{CC} = MIN, V_{IH} = 2 V, V_{IL} = MAX	I_{OL} = 12 mA		0.25	0.4		0.25	0.4	V
			I_{OL} = 24 mA					0.35	0.5	
I_{OZH}		V_{CC} = MAX, V_{IH} = 2 V, V_{IL} = MAX	V_O = 2.7 V			40			40	μA
I_{OZL}			V_O = 0.4 V			– 200			– 200	μA
I_I	A or B	V_{CC} = MAX,	V_I = 5.5 V			0.1			0.1	mA
	$\overline{G}$AB or GBA		V_I = 7 V			0.1			0.1	
I_{IH}		V_{CC} = MAX, V_I = 2.7 V				20			20	μA
I_{IL}	A inputs	V_{CC} = MAX, V_I = 0.4 V, GAB and GBA at 0 V				– 0.2			– 0.2	mA
	B inputs	V_{CC} = MAX, V_I = 0.4 V, GAB and GBA at 4.5 V				– 0.2			– 0.2	
	$\overline{G}$AB or GBA	V_{CC} = MAX, V_I = 0.4 V				– 0.2			– 0.2	
I_{OS}§		V_{CC} = MAX		– 40		– 225	– 40		– 225	mA
I_{CC}	Outputs high	V_{CC} = MAX, Outputs open, See Note 2	'LS242, 'LS243		22	38		22	38	mA
	Outputs low		'LS242, 'LS243		29	50		29	50	
	All outputs disabled		'LS242		29	50		29	50	
			'LS243		32	54		32	54	

† For conditions shown as MIN or MAX, use the appropriate value specified under recommended operating conditions.
‡ All typical values are at V_{CC} = 5 V, T_A = 25°C.
§ Not more than one output should be shorted at a time, and duration of the short-circuit should not exceed one second.
NOTE 2: I_{CC} is measured with transceivers enabled in one direction only, or with all transceivers disabled.

switching characteristics, V_{CC} = 5 V, T_A = 25°C

PARAMETER	TEST CONDITIONS		'LS242 MIN	'LS242 TYP	'LS242 MAX	'LS243 MIN	'LS243 TYP	'LS243 MAX	UNIT
t_{PLH}	R_L = 667 Ω, See Note 3	C_L = 45 pF,		9	14		12	18	ns
t_{PHL}				12	18		12	18	ns
t_{PZL}				20	30		20	30	ns
t_{PZH}				15	23		15	23	ns
t_{PLZ}	R_L = 667 Ω, See Note 3	C_L = 5 pF,		10	20		10	20	ns
t_{PHZ}				15	25		15	25	ns

NOTE 3: Load circuits and voltage waveforms are shown in Section 1.

PACKAGING INFORMATION

Orderable Device	Status (1)	Package Type	Package Drawing	Pins	Package Qty	Eco Plan (2)	Lead/Ball Finish	MSL Peak Temp (3)
80020012A	OBSOLETE	LCCC	FK	20		TBD	Call TI	Call TI
8002001CA	OBSOLETE	CDIP	J	14		TBD	Call TI	Call TI
8002001CA	OBSOLETE	CDIP	J	14		TBD	Call TI	Call TI
8002001DA	OBSOLETE	CFP	W	14		TBD	Call TI	Call TI
8002001DA	OBSOLETE	CFP	W	14		TBD	Call TI	Call TI
80020022A	OBSOLETE			20		TBD	Call TI	Call TI
80020022A	OBSOLETE			20		TBD	Call TI	Call TI
8002002CA	ACTIVE	CDIP	J	14	1	TBD	A42 SNPB	N / A for Pkg Type
8002002CA	ACTIVE	CDIP	J	14	1	TBD	A42 SNPB	N / A for Pkg Type
8002002DA	ACTIVE	CFP	W	14	1	TBD	A42	N / A for Pkg Type
8002002DA	ACTIVE	CFP	W	14	1	TBD	A42	N / A for Pkg Type
SN54LS243J	ACTIVE	CDIP	J	14	1	TBD	A42 SNPB	N / A for Pkg Type
SN54LS243J	ACTIVE	CDIP	J	14	1	TBD	A42 SNPB	N / A for Pkg Type
SN74LS242D	OBSOLETE	SOIC	D	14		TBD	Call TI	Call TI
SN74LS242D	OBSOLETE	SOIC	D	14		TBD	Call TI	Call TI
SN74LS242DR	OBSOLETE	SOIC	D	14		TBD	Call TI	Call TI
SN74LS242DR	OBSOLETE	SOIC	D	14		TBD	Call TI	Call TI
SN74LS242N	OBSOLETE	PDIP	N	14		TBD	Call TI	Call TI
SN74LS242N	OBSOLETE	PDIP	N	14		TBD	Call TI	Call TI
SN74LS243D	ACTIVE	SOIC	D	14	50	Green (RoHS & no Sb/Br)	CU NIPDAU	Level-1-260C-UNLIM
SN74LS243D	ACTIVE	SOIC	D	14	50	Green (RoHS & no Sb/Br)	CU NIPDAU	Level-1-260C-UNLIM
SN74LS243DE4	ACTIVE	SOIC	D	14	50	Green (RoHS & no Sb/Br)	CU NIPDAU	Level-1-260C-UNLIM
SN74LS243DE4	ACTIVE	SOIC	D	14	50	Green (RoHS & no Sb/Br)	CU NIPDAU	Level-1-260C-UNLIM
SN74LS243DR	ACTIVE	SOIC	D	14	2500	Green (RoHS & no Sb/Br)	CU NIPDAU	Level-1-260C-UNLIM
SN74LS243DR	ACTIVE	SOIC	D	14	2500	Green (RoHS & no Sb/Br)	CU NIPDAU	Level-1-260C-UNLIM
SN74LS243DRE4	ACTIVE	SOIC	D	14	2500	Green (RoHS & no Sb/Br)	CU NIPDAU	Level-1-260C-UNLIM
SN74LS243DRE4	ACTIVE	SOIC	D	14	2500	Green (RoHS & no Sb/Br)	CU NIPDAU	Level-1-260C-UNLIM
SN74LS243J	OBSOLETE	CDIP	J	14		TBD	Call TI	Call TI
SN74LS243J	OBSOLETE	CDIP	J	14		TBD	Call TI	Call TI
SN74LS243N	ACTIVE	PDIP	N	14	25	Pb-Free (RoHS)	CU NIPDAU	N / A for Pkg Type
SN74LS243N	ACTIVE	PDIP	N	14	25	Pb-Free (RoHS)	CU NIPDAU	N / A for Pkg Type
SN74LS243N3	OBSOLETE	PDIP	N	14		TBD	Call TI	Call TI
SN74LS243N3	OBSOLETE	PDIP	N	14		TBD	Call TI	Call TI
SN74LS243NE4	ACTIVE	PDIP	N	14	25	Pb-Free (RoHS)	CU NIPDAU	N / A for Pkg Type

Orderable Device	Status [1]	Package Type	Package Drawing	Pins	Package Qty	Eco Plan [2]	Lead/Ball Finish	MSL Peak Temp [3]
SN74LS243NE4	ACTIVE	PDIP	N	14	25	Pb-Free (RoHS)	CU NIPDAU	N / A for Pkg Type
SNJ54LS243FK	OBSOLETE			20		TBD	Call TI	Call TI
SNJ54LS243FK	OBSOLETE			20		TBD	Call TI	Call TI
SNJ54LS243J	ACTIVE	CDIP	J	14	1	TBD	A42 SNPB	N / A for Pkg Type
SNJ54LS243J	ACTIVE	CDIP	J	14	1	TBD	A42 SNPB	N / A for Pkg Type
SNJ54LS243W	ACTIVE	CFP	W	14	1	TBD	A42	N / A for Pkg Type
SNJ54LS243W	ACTIVE	CFP	W	14	1	TBD	A42	N / A for Pkg Type

[1] The marketing status values are defined as follows:
ACTIVE: Product device recommended for new designs.
LIFEBUY: TI has announced that the device will be discontinued, and a lifetime-buy period is in effect.
NRND: Not recommended for new designs. Device is in production to support existing customers, but TI does not recommend using this part in a new design.
PREVIEW: Device has been announced but is not in production. Samples may or may not be available.
OBSOLETE: TI has discontinued the production of the device.

[2] Eco Plan - The planned eco-friendly classification: Pb-Free (RoHS), Pb-Free (RoHS Exempt), or Green (RoHS & no Sb/Br) - please check http://www.ti.com/productcontent for the latest availability information and additional product content details.
TBD: The Pb-Free/Green conversion plan has not been defined.
Pb-Free (RoHS): TI's terms "Lead-Free" or "Pb-Free" mean semiconductor products that are compatible with the current RoHS requirements for all 6 substances, including the requirement that lead not exceed 0.1% by weight in homogeneous materials. Where designed to be soldered at high temperatures, TI Pb-Free products are suitable for use in specified lead-free processes.
Pb-Free (RoHS Exempt): This component has a RoHS exemption for either 1) lead-based flip-chip solder bumps used between the die and package, or 2) lead-based die adhesive used between the die and leadframe. The component is otherwise considered Pb-Free (RoHS compatible) as defined above.
Green (RoHS & no Sb/Br): TI defines "Green" to mean Pb-Free (RoHS compatible), and free of Bromine (Br) and Antimony (Sb) based flame retardants (Br or Sb do not exceed 0.1% by weight in homogeneous material)

[3] MSL, Peak Temp. -- The Moisture Sensitivity Level rating according to the JEDEC industry standard classifications, and peak solder temperature.

Important Information and Disclaimer: The information provided on this page represents TI's knowledge and belief as of the date that it is provided. TI bases its knowledge and belief on information provided by third parties, and makes no representation or warranty as to the accuracy of such information. Efforts are underway to better integrate information from third parties. TI has taken and continues to take reasonable steps to provide representative and accurate information but may not have conducted destructive testing or chemical analysis on incoming materials and chemicals. TI and TI suppliers consider certain information to be proprietary, and thus CAS numbers and other limited information may not be available for release.

In no event shall TI's liability arising out of such information exceed the total purchase price of the TI part(s) at issue in this document sold by TI to Customer on an annual basis.

IMPORTANT NOTICE

Texas Instruments Incorporated and its subsidiaries (TI) reserve the right to make corrections, modifications, enhancements, improvements, and other changes to its products and services at any time and to discontinue any product or service without notice. Customers should obtain the latest relevant information before placing orders and should verify that such information is current and complete. All products are sold subject to TI's terms and conditions of sale supplied at the time of order acknowledgment.

TI warrants performance of its hardware products to the specifications applicable at the time of sale in accordance with TI's standard warranty. Testing and other quality control techniques are used to the extent TI deems necessary to support this warranty. Except where mandated by government requirements, testing of all parameters of each product is not necessarily performed.

TI assumes no liability for applications assistance or customer product design. Customers are responsible for their products and applications using TI components. To minimize the risks associated with customer products and applications, customers should provide adequate design and operating safeguards.

TI does not warrant or represent that any license, either express or implied, is granted under any TI patent right, copyright, mask work right, or other TI intellectual property right relating to any combination, machine, or process in which TI products or services are used. Information published by TI regarding third-party products or services does not constitute a license from TI to use such products or services or a warranty or endorsement thereof. Use of such information may require a license from a third party under the patents or other intellectual property of the third party, or a license from TI under the patents or other intellectual property of TI.

Reproduction of information in TI data books or data sheets is permissible only if reproduction is without alteration and is accompanied by all associated warranties, conditions, limitations, and notices. Reproduction of this information with alteration is an unfair and deceptive business practice. TI is not responsible or liable for such altered documentation.

Resale of TI products or services with statements different from or beyond the parameters stated by TI for that product or service voids all express and any implied warranties for the associated TI product or service and is an unfair and deceptive business practice. TI is not responsible or liable for any such statements.

Following are URLs where you can obtain information on other Texas Instruments products and application solutions:

Products		**Applications**	
Amplifiers	amplifier.ti.com	Audio	www.ti.com/audio
Data Converters	dataconverter.ti.com	Automotive	www.ti.com/automotive
DSP	dsp.ti.com	Broadband	www.ti.com/broadband
Interface	interface.ti.com	Digital Control	www.ti.com/digitalcontrol
Logic	logic.ti.com	Military	www.ti.com/military
Power Mgmt	power.ti.com	Optical Networking	www.ti.com/opticalnetwork
Microcontrollers	microcontroller.ti.com	Security	www.ti.com/security
Low Power Wireless	www.ti.com/lpw	Telephony	www.ti.com/telephony
		Video & Imaging	www.ti.com/video
		Wireless	www.ti.com/wireless

Mailing Address: Texas Instruments
Post Office Box 655303 Dallas, Texas 75265

Copyright © 2006, Texas Instruments Incorporated