- **Package Options Include Plastic Small-Outline (D) Packages, Ceramic Chip Carriers (FK), and Standard Plastic (N) and Ceramic (J) 300-mil DIPs**

description

These devices contain four independent 2-input positive-NAND gates. They perform the Boolean functions $Y = \overline{A \bullet B}$ or $Y = \overline{A} + \overline{B}$ in positive logic.

The SN54ALS00A and SN54AS00 are characterized for operation over the full military temperature range of –55°C to 125°C. The SN74ALS00A and SN74AS00 are characterized for operation from 0°C to 70°C.

FUNCTION TABLE
(each gate)

INPUTS		OUTPUT
A	B	Y
H	H	L
L	X	H
X	L	H

logic symbol†

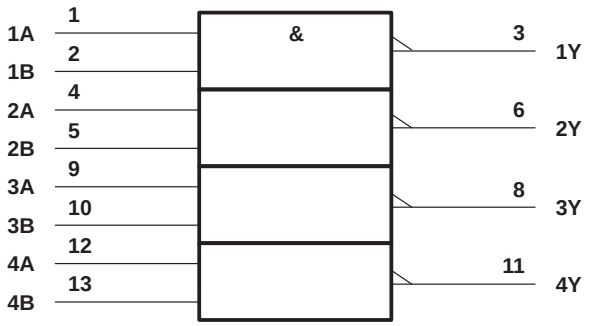

† This symbol is in accordance with ANSI/IEEE Std 91-1984 and IEC Publication 617-12.
Pin numbers shown are for the D, J, and N packages.

SN54ALS00A, SN54AS00 . . . J PACKAGE
SN74ALS00A, SN74AS00 . . . D OR N PACKAGE
(TOP VIEW)

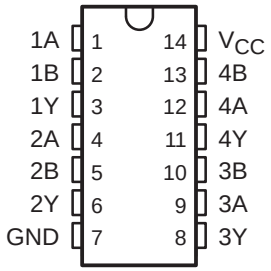

SN54ALS00A, SN54AS00 . . . FK PACKAGE
(TOP VIEW)

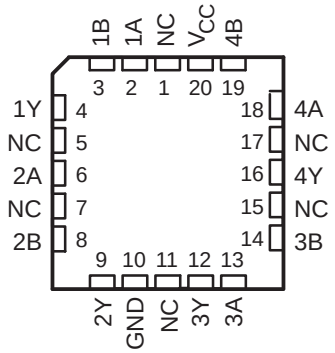

NC – No internal connection

PRODUCTION DATA information is current as of publication date. Products conform to specifications per the terms of Texas Instruments standard warranty. Production processing does not necessarily include testing of all parameters.

Copyright © 1994, Texas Instruments Incorporated

PACKAGING INFORMATION

Orderable Device	Status [1]	Package Type	Package Drawing	Pins	Package Qty	Eco Plan [2]	Lead/Ball Finish	MSL Peak Temp [3]
5962-86833012A	ACTIVE	LCCC	FK	20	1	TBD	Call TI	Level-NC-NC-NC
5962-8683301DA	ACTIVE	CFP	W	14	1	TBD	Call TI	Level-NC-NC-NC
JM38510/37001B2A	ACTIVE	LCCC	FK	20	1	TBD	Call TI	Level-NC-NC-NC
JM38510/37001BCA	ACTIVE	CDIP	J	14	1	TBD	Call TI	Level-NC-NC-NC
SN54ALS00AJ	ACTIVE	CDIP	J	14	1	TBD	Call TI	Level-NC-NC-NC
SN54AS00J	ACTIVE	CDIP	J	14	1	TBD	Call TI	Level-NC-NC-NC
SN74ALS00AD	ACTIVE	SOIC	D	14	50	Pb-Free (RoHS)	CU NIPDAU	Level-2-260C-1 YEAR/ Level-1-235C-UNLIM
SN74ALS00ADBR	ACTIVE	SSOP	DB	14	2000	Pb-Free (RoHS)	CU NIPDAU	Level-2-260C-1 YEAR/ Level-1-235C-UNLIM
SN74ALS00ADBRE4	ACTIVE	SSOP	DB	14	2000	Pb-Free (RoHS)	CU NIPDAU	Level-2-260C-1 YEAR/ Level-1-235C-UNLIM
SN74ALS00ADR	ACTIVE	SOIC	D	14	2500	Pb-Free (RoHS)	CU NIPDAU	Level-2-260C-1 YEAR/ Level-1-235C-UNLIM
SN74ALS00AN	ACTIVE	PDIP	N	14	25	Pb-Free (RoHS)	CU NIPDAU	Level-NC-NC-NC
SN74ALS00AN3	OBSOLETE	PDIP	N	14		TBD	Call TI	Call TI
SN74ALS00ANSR	ACTIVE	SO	NS	14	2000	Pb-Free (RoHS)	CU NIPDAU	Level-2-260C-1 YEAR/ Level-1-235C-UNLIM
SN74ALS00ANSRE4	ACTIVE	SO	NS	14	2000	Pb-Free (RoHS)	CU NIPDAU	Level-2-260C-1 YEAR/ Level-1-235C-UNLIM
SN74AS00D	ACTIVE	SOIC	D	14	50	Pb-Free (RoHS)	CU NIPDAU	Level-2-260C-1 YEAR/ Level-1-235C-UNLIM
SN74AS00DR	ACTIVE	SOIC	D	14	2500	Pb-Free (RoHS)	CU NIPDAU	Level-2-260C-1 YEAR/ Level-1-235C-UNLIM
SN74AS00N	ACTIVE	PDIP	N	14	25	Pb-Free (RoHS)	CU NIPDAU	Level-NC-NC-NC
SN74AS00NSR	ACTIVE	SO	NS	14	2000	Pb-Free (RoHS)	CU NIPDAU	Level-2-260C-1 YEAR/ Level-1-235C-UNLIM
SN74AS00NSRE4	ACTIVE	SO	NS	14	2000	Pb-Free (RoHS)	CU NIPDAU	Level-2-260C-1 YEAR/ Level-1-235C-UNLIM
SNJ54ALS00AFK	ACTIVE	LCCC	FK	20	1	TBD	Call TI	Level-NC-NC-NC
SNJ54ALS00AJ	ACTIVE	CDIP	J	14	1	TBD	Call TI	Level-NC-NC-NC
SNJ54ALS00AW	ACTIVE	CFP	W	14	1	TBD	Call TI	Level-NC-NC-NC
SNJ54AS00FK	ACTIVE	LCCC	FK	20	1	TBD	Call TI	Level-NC-NC-NC
SNJ54AS00J	ACTIVE	CDIP	J	14	1	TBD	Call TI	Level-NC-NC-NC

[1] The marketing status values are defined as follows:
ACTIVE: Product device recommended for new designs.
LIFEBUY: TI has announced that the device will be discontinued, and a lifetime-buy period is in effect.
NRND: Not recommended for new designs. Device is in production to support existing customers, but TI does not recommend using this part in a new design.
PREVIEW: Device has been announced but is not in production. Samples may or may not be available.
OBSOLETE: TI has discontinued the production of the device.

[2] Eco Plan - The planned eco-friendly classification: Pb-Free (RoHS) or Green (RoHS & no Sb/Br) - please check http://www.ti.com/productcontent for the latest availability information and additional product content details.
TBD: The Pb-Free/Green conversion plan has not been defined.
Pb-Free (RoHS): TI's terms "Lead-Free" or "Pb-Free" mean semiconductor products that are compatible with the current RoHS requirements