25AA256/25LC256

256K SPI™ Bus Serial EEPROM

Device Selection Table

Part Number	Vcc Range	Page Size	Temp. Ranges	Packages
25LC256	2.5-5.5V	64 Byte	I, E	P, SN, SM, ST, MF
25AA256	1.8-5.5V	64 Byte	I	P, SN, SM, ST, MF

Features:

- Max. clock 10 MHz
- Low-power CMOS technology:
  - Max. Write Current: 5 mA at 5.5V, 10 MHz
  - Read Current: 6 mA at 5.5V, 10 MHz
  - Standby Current: 1 µA at 5.5V
- 32,768 x 8-bit organization
- 64 byte page
- Self-timed erase and write cycles (5 ms max.)
- Block write protection:
  - Protect none, 1/4, 1/2 or all of array
- Built-in write protection:
  - Power-on/off data protection circuitry
  - Write enable latch
  - Write-protect pin
- Sequential read
- High reliability:
  - Endurance: 1,000,000 erase/write cycles
  - Data retention: > 200 years
  - ESD protection: > 4000V
- Temperature ranges supported:
  - Industrial (I): -40°C to +85°C
  - Automotive (E): -40°C to +125°C
- Pb-free packages available

Pin Function Table

Name	Function
$\overline{CS}$	Chip Select Input
SO	Serial Data Output
$\overline{WP}$	Write-Protect
VSS	Ground
SI	Serial Data Input
SCK	Serial Clock Input
$\overline{HOLD}$	Hold Input
VCC	Supply Voltage

Description:

The Microchip Technology Inc. 25AA256/25LC256 (25XX256*) are 256 Kbit Serial Electrically Erasable PROMs. The memory is accessed via a simple Serial Peripheral Interface™ (SPI™) compatible serial bus. The bus signals required are a clock input (SCK) plus separate data in (SI) and data out (SO) lines. Access to the device is controlled through a Chip Select ($\overline{CS}$) input.

Communication to the device can be paused via the hold pin ($\overline{HOLD}$). While the device is paused, transitions on its inputs will be ignored, with the exception of Chip Select, allowing the host to service higher priority interrupts.

The 25XX256 is available in standard packages including 8-lead PDIP and SOIC, and advanced packaging including 8-lead DFN and 8-lead TSSOP. Pb-free (Pure Sn) finish is available.

Package Types (not to scale)

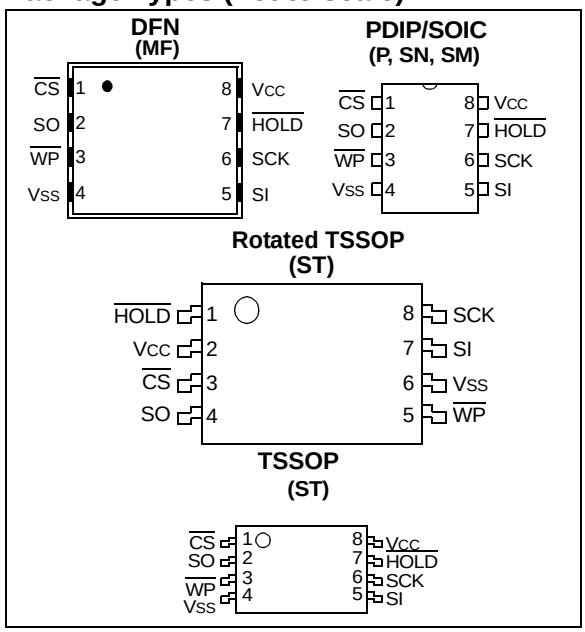

SPI is a registered trademark of Motorola Corporation.

* 25XX256 is used in this document as a generic part number for the 25AA256, 25LC256 devices.

© 2005 Microchip Technology Inc.

1.0 ELECTRICAL CHARACTERISTICS

Absolute Maximum Ratings (†)

V_{CC} 6.5V

All inputs and outputs w.r.t. V_{SS} ..... -0.6V to V_{CC} +1.0V

Storage temperature ..... -65°C to 150°C

Ambient temperature under bias ..... -40°C to 125°C

ESD protection on all pins ..... 4 kV

† NOTICE: Stresses above those listed under “Absolute Maximum Ratings” may cause permanent damage to the device. This is a stress rating only and functional operation of the device at those or any other conditions above those indicated in the operational listings of this specification is not implied. Exposure to maximum rating conditions for an extended period of time may affect device reliability.

TABLE 1-1: DC CHARACTERISTICS

DC CHARACTERISTICS			Industrial (I): T_A = -40°C to +85°C V_{CC} = 1.8V to 5.5V Automotive (E): T_A = -40°C to +125°C V_{CC} = 2.5V to 5.5V				
Param. No.	**Sym.**	**Characteristic**	**Min.**	**Typ.(2)**	**Max.**	**Units**	**Test Conditions**
D001	V_{IH}	High-level input voltage	.7 V_{CC}	—	V_{CC} +1	V	
D002	V_{IL}	Low-level input voltage	-0.3	—	0.3 V_{CC}	V	$V_{CC} \geq$ 2.5V
D003	V_{IL}		-0.3	—	0.2 V_{CC}	V	V_{CC} < 2.5V
D004	V_{OL}	Low-level output voltage	—	—	0.4	V	I_{OL} = 2.1 mA, V_{CC} = 4.5V
D005	V_{OL}		—	—	0.2	V	I_{OL} = 1.0 mA, V_{CC} = 2.5V
D006	V_{OH}	High-level output voltage	V_{CC} -0.5	—	—	V	I_{OH} = -400 µA
D007	I_{LI}	Input leakage current	—	—	±1	µA	$\overline{CS}$ = V_{CC}, V_{IN} = V_{SS} or V_{CC}
D008	I_{LO}	Output leakage current	—	—	±1	µA	$\overline{CS}$ = V_{CC}, V_{OUT} = V_{SS} or V_{CC}
D009	C_{INT}	Internal Capacitance (all inputs and outputs)	—	—	7	pF	T_A = 25°C, F_{CLK} = 1.0 MHz, V_{CC} = 5.0V **(Note 1)**
D010	I_{CC} Read	Operating Current	— —	2.5 0.5	6 2.5	mA mA	V_{CC} = 5.5V; F_{CLK} = 10.0 MHz; SO = Open V_{CC} = 2.5V; F_{CLK} = 5.0 MHz; SO = Open
D011	I_{CC} Write		— —	0.6 0.15	5 3	mA mA	V_{CC} = 5.5V V_{CC} = 2.5V
D012	I_{CCS}	Standby Current	— —	0.1	5 1	µA µA	$\overline{CS}$ = V_{CC} = 5.5V, Inputs tied to V_{CC} or V_{SS}, 125°C $\overline{CS}$ = V_{CC} = 5.5V, Inputs tied to V_{CC} or V_{SS}, 85°C

Note 1: This parameter is periodically sampled and not 100% tested.

2: Typical measurements taken at room temperature (25°C).

© 2005 Microchip Technology Inc.

TABLE 1-2: AC CHARACTERISTICS

AC CHARACTERISTICS			Industrial (I): TA = -40°C to +85°C VCC = 1.8V to 5.5V Automotive (E): TA = -40°C to +125°C VCC = 2.5V to 5.5V			
Param. No.	**Sym.**	**Characteristic**	**Min.**	**Max.**	**Units**	**Test Conditions**
1	FCLK	Clock Frequency	— — —	10 5 3	MHz MHz MHz	4.5V ≤ Vcc ≤ 5.5V 2.5V ≤ Vcc < 4.5V 1.8V ≤ Vcc < 2.5V
2	TCSS	$\overline{CS}$ Setup Time	50 100 150	— — —	ns ns ns	4.5V ≤ Vcc ≤ 5.5V 2.5V ≤ Vcc < 4.5V 1.8V ≤ Vcc < 2.5V
3	TCSH	$\overline{CS}$ Hold Time	100 200 250	— — —	ns ns ns	4.5V ≤ Vcc ≤ 5.5V 2.5V ≤ Vcc < 4.5V 1.8V ≤ Vcc < 2.5V
4	TCSD	$\overline{CS}$ Disable Time	50	—	ns	—
5	Tsu	Data Setup Time	10 20 30	— — —	ns ns ns	4.5V ≤ Vcc ≤ 5.5V 2.5V ≤ Vcc < 4.5V 1.8V ≤ Vcc < 2.5V
6	THD	Data Hold Time	20 40 50	— — —	ns ns ns	4.5V ≤ Vcc ≤ 5.5V 2.5V ≤ Vcc < 4.5V 1.8V ≤ Vcc < 2.5V
7	TR	CLK Rise Time	—	100	ns	**(Note 1)**
8	TF	CLK Fall Time	—	100	ns	**(Note 1)**
9	THI	Clock High Time	50 100 150	— — —	ns ns ns	4.5V ≤ Vcc ≤ 5.5V 2.5V ≤ Vcc < 4.5V 1.8V ≤ Vcc < 2.5V
10	TLO	Clock Low Time	50 100 150	— — —	ns ns ns	4.5V ≤ Vcc ≤ 5.5V 2.5V ≤ Vcc < 4.5V 1.8V ≤ Vcc < 2.5V
11	TCLD	Clock Delay Time	50	—	ns	—
12	TCLE	Clock Enable Time	50	—	ns	—
13	TV	Output Valid from Clock Low	— — —	50 100 160	ns ns ns	4.5V ≤ Vcc ≤ 5.5V 2.5V ≤ Vcc < 4.5V 1.8V ≤ Vcc < 2.5V
14	THO	Output Hold Time	0	—	ns	**(Note 1)**
15	TDIS	Output Disable Time	— — —	40 80 160	ns ns ns	4.5V ≤ Vcc ≤ 5.5V **(Note 1)** 2.5V ≤ Vcc ≤ 4.5V **(Note 1)** 1.8V ≤ Vcc ≤ 2.5V **(Note 1)**
16	THS	$\overline{HOLD}$ Setup Time	20 40 80	— — —	ns ns ns	4.5V ≤ Vcc ≤ 5.5V 2.5V ≤ Vcc < 4.5V 1.8V ≤ Vcc < 2.5V
17	THH	$\overline{HOLD}$ Hold Time	20 40 80	— — —	ns ns ns	4.5V ≤ Vcc ≤ 5.5V 2.5V ≤ Vcc < 4.5V 1.8V ≤ Vcc < 2.5V

Note 1: This parameter is periodically sampled and not 100% tested.

2: TWC begins on the rising edge of $\overline{CS}$ after a valid write sequence and ends when the internal write cycle is complete.

3: This parameter is not tested but ensured by characterization. For endurance estimates in a specific application, please consult the Total Endurance™ Model which can be obtained from Microchip's web site at www.microchip.com.

TABLE 1-2: AC CHARACTERISTICS (CONTINUED)

AC CHARACTERISTICS			Industrial (I): T_A = -40°C to +85°C V_{CC} = 1.8V to 5.5V Automotive (E): T_A = -40°C to +125°C V_{CC} = 2.5V to 5.5V			
Param. No.	**Sym.**	**Characteristic**	**Min.**	**Max.**	**Units**	**Test Conditions**
18	T_{HZ}	$\overline{HOLD}$ Low to Output High-Z	30 60 160	— — —	ns ns ns	4.5V ≤ Vcc ≤ 5.5V **(Note 1)** 2.5V ≤ Vcc < 4.5V **(Note 1)** 1.8V ≤ Vcc < 2.5V **(Note 1)**
19	T_{HV}	$\overline{HOLD}$ High to Output Valid	30 60 160	— — —	ns ns ns	4.5V ≤ Vcc ≤ 5.5V 2.5V ≤ Vcc < 4.5V 1.8V ≤ Vcc < 2.5V
20	T_{WC}	Internal Write Cycle Time	—	5	ms	**(NOTE 2)**
21	—	Endurance	1M	—	E/W Cycles	**(NOTE 3)**

Note 1: This parameter is periodically sampled and not 100% tested.

2: T_{WC} begins on the rising edge of $\overline{CS}$ after a valid write sequence and ends when the internal write cycle is complete.

3: This parameter is not tested but ensured by characterization. For endurance estimates in a specific application, please consult the Total Endurance™ Model which can be obtained from Microchip's web site at www.microchip.com.

TABLE 1-3: AC TEST CONDITIONS

AC Waveform:	
V_{LO} = 0.2V	—
V_{HI} = V_{CC} – 0.2V	**(Note 1)**
V_{HI} = 4.0V	**(Note 2)**
C_L = 50 pF	**—**
Timing Measurement Reference Level	
Input	0.5 V_{CC}
Output	0.5 V_{CC}

Note 1: For V_{CC} ≤ 4.0V

2: For V_{CC} > 4.0V

© 2005 Microchip Technology Inc.

FIGURE 1-1: HOLD TIMING

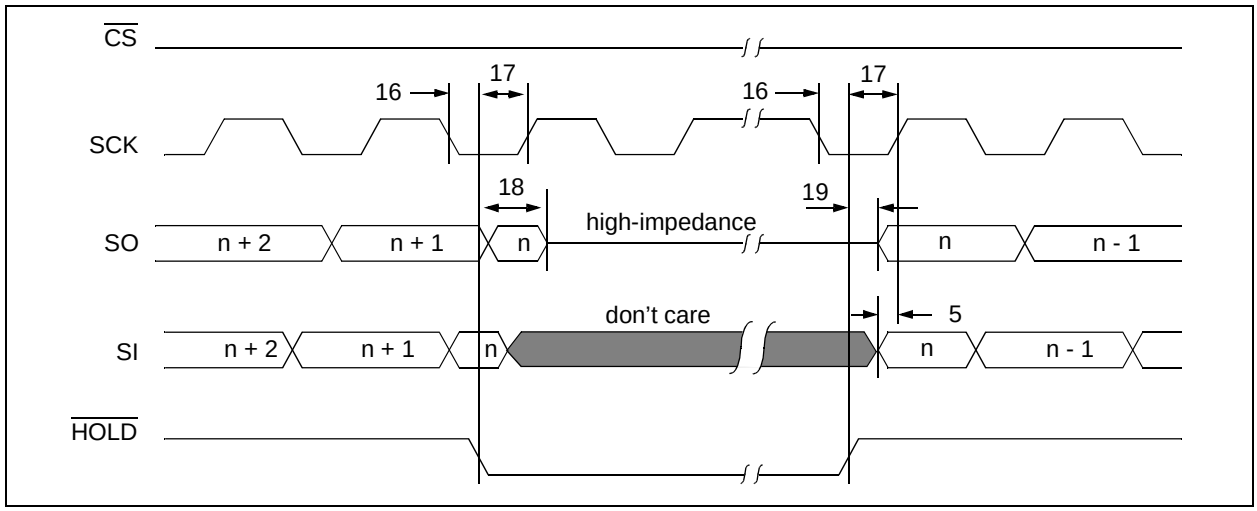

FIGURE 1-2: SERIAL INPUT TIMING

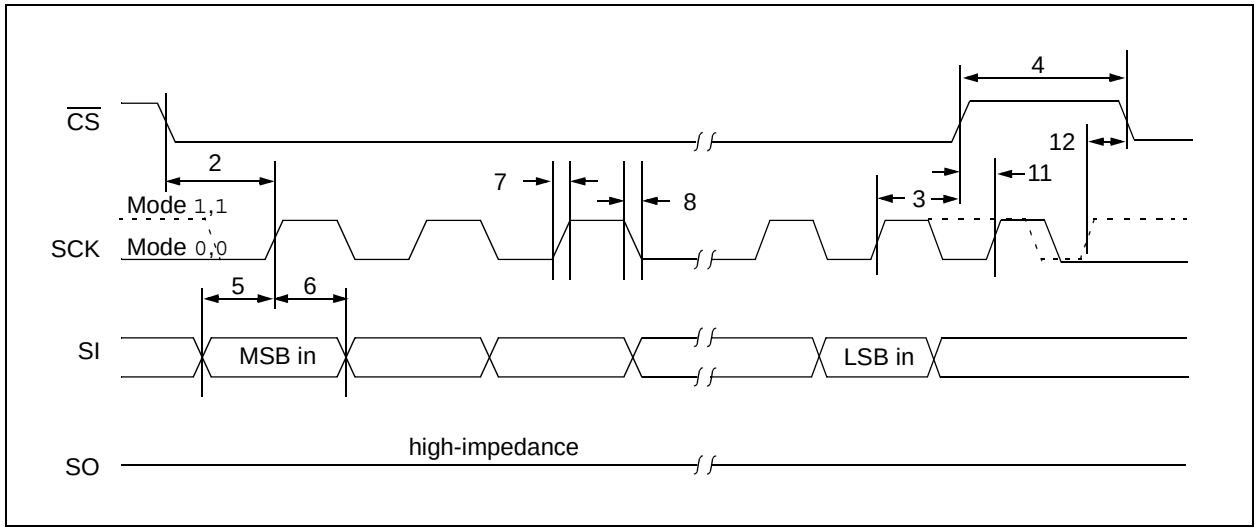

FIGURE 1-3: SERIAL OUTPUT TIMING

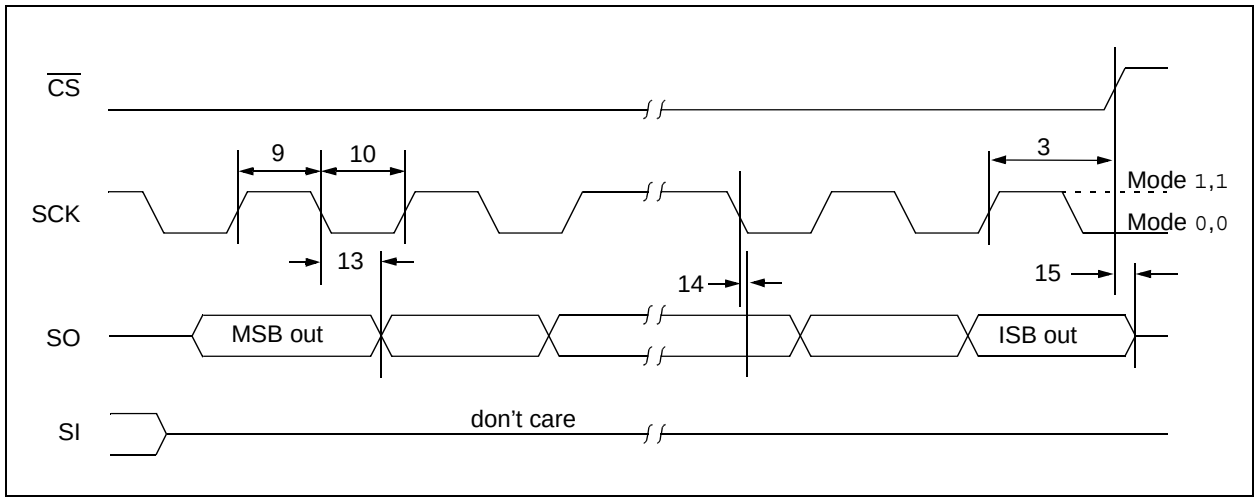

2.0 FUNCTIONAL DESCRIPTION

2.1 Principles of Operation

The 25XX256 is a 32,768-byte Serial EEPROM designed to interface directly with the Serial Peripheral Interface (SPI) port of many of today's popular microcontroller families, including Microchip's PICmicro® microcontrollers. It may also interface with microcontrollers that do not have a built-in SPI port by using discrete I/O lines programmed properly in firmware to match the SPI protocol.

The 25XX256 contains an 8-bit instruction register. The device is accessed via the SI pin, with data being clocked in on the rising edge of SCK. The $\overline{CS}$ pin must be low and the $\overline{HOLD}$ pin must be high for the entire operation.

Table 2-1 contains a list of the possible instruction bytes and format for device operation. All instructions, addresses, and data are transferred MSB first, LSB last.

Data (SI) is sampled on the first rising edge of SCK after $\overline{CS}$ goes low. If the clock line is shared with other peripheral devices on the SPI bus, the user can assert the $\overline{HOLD}$ input and place the 25XX256 in 'HOLD' mode. After releasing the $\overline{HOLD}$ pin, operation will resume from the point when the $\overline{HOLD}$ was asserted.

2.2 Read Sequence

The device is selected by pulling $\overline{CS}$ low. The 8-bit `READ` instruction is transmitted to the 25XX256 followed by the 16-bit address, with the first MSB of the address being a "don't care" bit. After the correct `READ` instruction and address are sent, the data stored in the memory at the selected address is shifted out on the SO pin. The data stored in the memory at the next address can be read sequentially by continuing to provide clock pulses. The internal Address Pointer is automatically incremented to the next higher address after each byte of data is shifted out. When the highest address is reached (7FFFh), the address counter rolls over to address 0000h allowing the read cycle to be continued indefinitely. The read operation is terminated by raising the $\overline{CS}$ pin (Figure 2-1).

2.3 Write Sequence

Prior to any attempt to write data to the 25XX256, the write enable latch must be set by issuing the `WREN` instruction (Figure 2-4). This is done by setting $\overline{CS}$ low and then clocking out the proper instruction into the 25XX256. After all eight bits of the instruction are transmitted, the $\overline{CS}$ must be brought high to set the write enable latch. If the write operation is initiated immediately after the `WREN` instruction without $\overline{CS}$ being brought high, the data will not be written to the array because the write enable latch will not have been properly set.

Once the write enable latch is set, the user may proceed by setting the $\overline{CS}$ low, issuing a `WRITE` instruction, followed by the 16-bit address, with the first MSB of the address being a "don't care" bit, and then the data to be written. Up to 64 bytes of data can be sent to the device before a write cycle is necessary. The only restriction is that all of the bytes must reside in the same page.

Note:	Page write operations are limited to writing bytes within a single physical page, **regardless** of the number of bytes actually being written. Physical page boundaries start at addresses that are integer multiples of the page buffer size (or 'page size') and, end at addresses that are integer multiples of page size – 1. If a Page Write command attempts to write across a physical page boundary, the result is that the data wraps around to the beginning of the current page (overwriting data previously stored there), instead of being written to the next page as might be expected. It is therefore necessary for the application software to prevent page write operations that would attempt to cross a page boundary.

For the data to be actually written to the array, the $\overline{CS}$ must be brought high after the Least Significant bit (D0) of the nth data byte has been clocked in. If $\overline{CS}$ is brought high at any other time, the write operation will not be completed. Refer to Figure 2-2 and Figure 2-3 for more detailed illustrations on the byte write sequence and the page write sequence, respectively. While the write is in progress, the STATUS register may be read to check the status of the WPEN, WIP, WEL, BP1 and BP0 bits (Figure 2-6). A read attempt of a memory array location will not be possible during a write cycle. When the write cycle is completed, the write enable latch is reset.

© 2005 Microchip Technology Inc.

BLOCK DIAGRAM

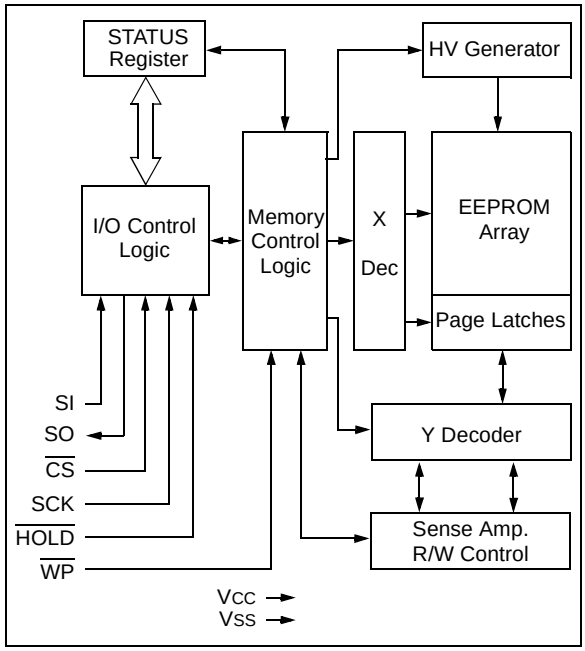

TABLE 2-1: INSTRUCTION SET

Instruction Name	Instruction Format	Description
READ	0000 0011	Read data from memory array beginning at selected address
WRITE	0000 0010	Write data to memory array beginning at selected address
WRDI	0000 0100	Reset the write enable latch (disable write operations)
WREN	0000 0110	Set the write enable latch (enable write operations)
RDSR	0000 0101	Read STATUS register
WRSR	0000 0001	Write STATUS register

FIGURE 2-1: READ SEQUENCE

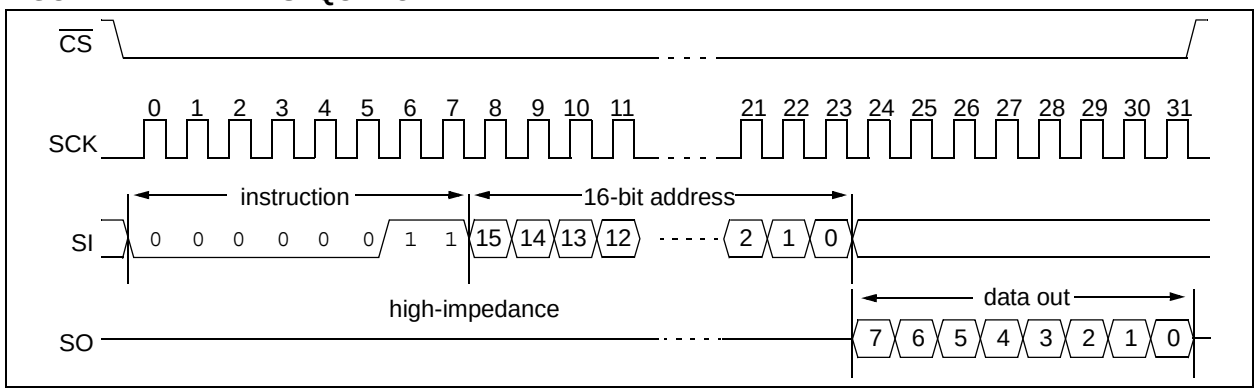

FIGURE 2-2: BYTE WRITE SEQUENCE

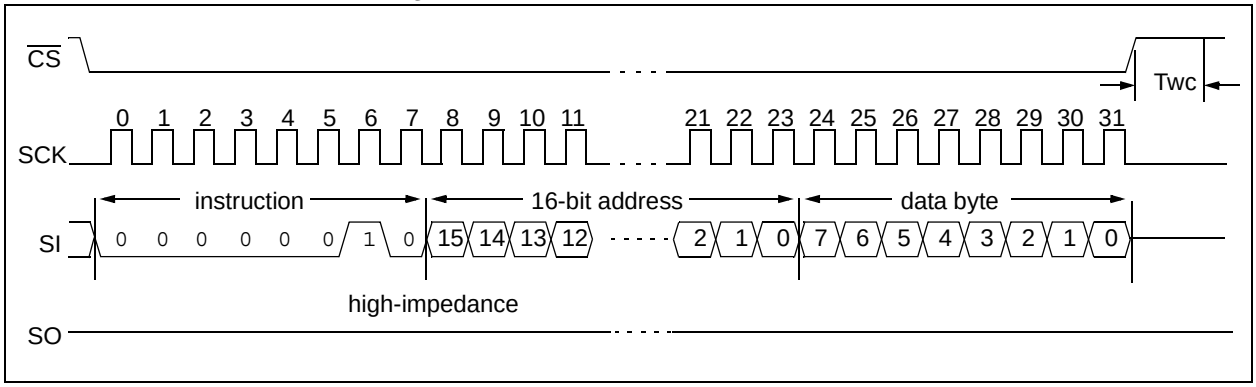

FIGURE 2-3: PAGE WRITE SEQUENCE

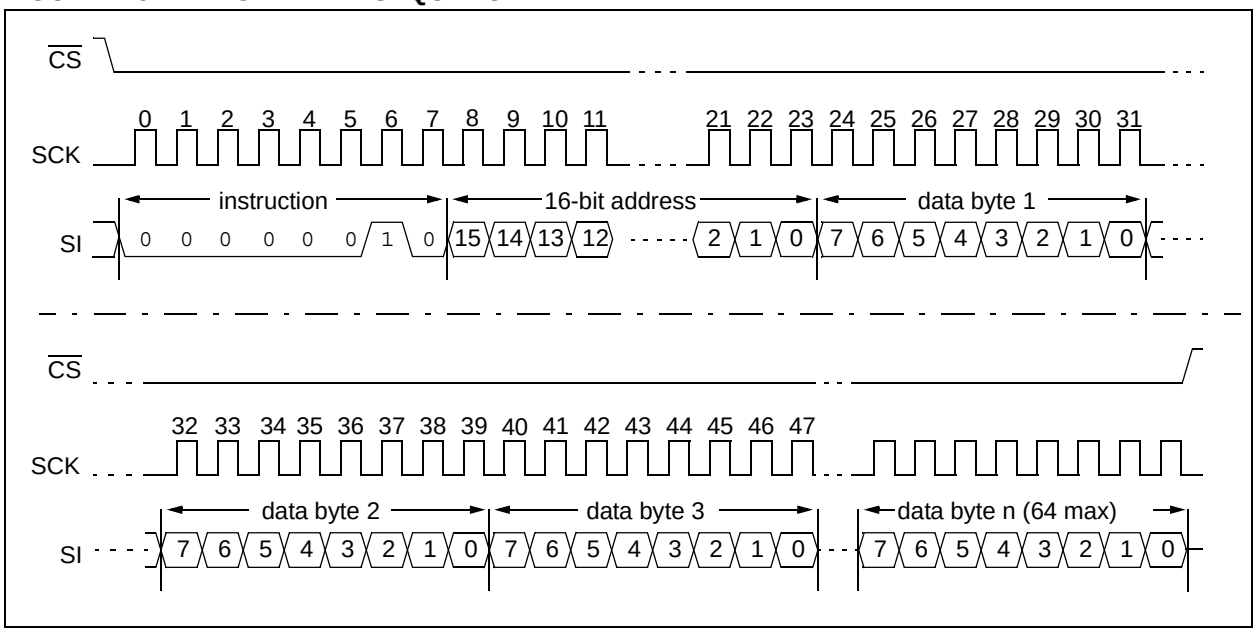

© 2005 Microchip Technology Inc.

2.4 Write Enable (WREN) and Write Disable (WRDI)

The 25XX256 contains a write enable latch. See Table 2-4 for the Write-Protect Functionality Matrix. This latch must be set before any write operation will be completed internally. The WREN instruction will set the latch, and the WRDI will reset the latch.

The following is a list of conditions under which the write enable latch will be reset:

- Power-up
- WRDI instruction successfully executed
- WRSR instruction successfully executed
- WRITE instruction successfully executed

FIGURE 2-4: WRITE ENABLE SEQUENCE (WREN)

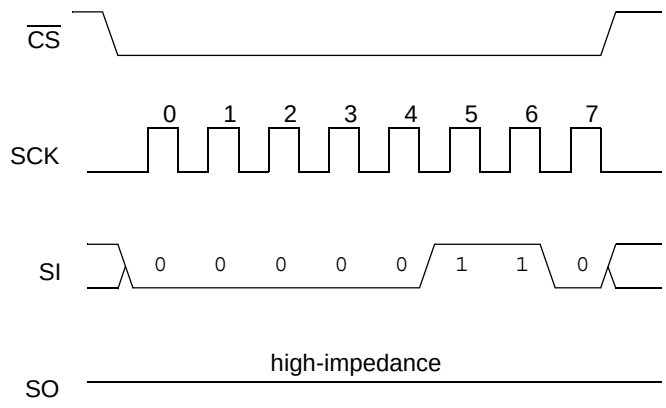

FIGURE 2-5: WRITE DISABLE SEQUENCE (WRDI)

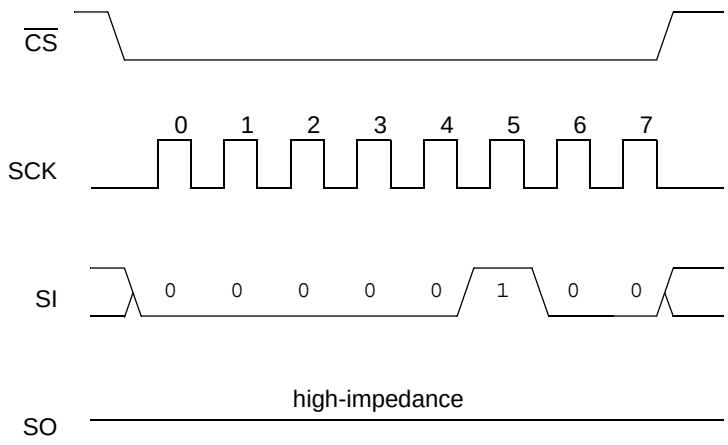

2.5 Read Status Register Instruction (RDSR)

The Read Status Register instruction (RDSR) provides access to the STATUS register. The STATUS register may be read at any time, even during a write cycle. The STATUS register is formatted as follows:

TABLE 2-2: STATUS REGISTER

7	6	5	4	3	2	1	0
W/R	-	-	-	W/R	W/R	R	R
WPEN	x	x	x	BP1	BP0	WEL	WIP
W/R = writable/readable. R = read-only.							

The **Write-In-Process (WIP)** bit indicates whether the 25XX256 is busy with a write operation. When set to a '1', a write is in progress, when set to a '0', no write is in progress. This bit is read-only.

The **Write Enable Latch (WEL)** bit indicates the status of the write enable latch and is read-only. When set to a '1', the latch allows writes to the array, when set to a '0', the latch prohibits writes to the array. The state of this bit can always be updated via the WREN or WRDI commands, regardless of the state of write protection on the STATUS register. These commands are shown in Figure 2-4 and Figure 2-5.

The **Block Protection (BP0 and BP1)** bits indicate which blocks are currently write-protected. These bits are set by the user issuing the WRSR instruction. These bits are nonvolatile, and are shown in Table 2-3.

See Figure 2-6 for the RDSR timing sequence.

FIGURE 2-6: READ STATUS REGISTER TIMING SEQUENCE (RDSR)

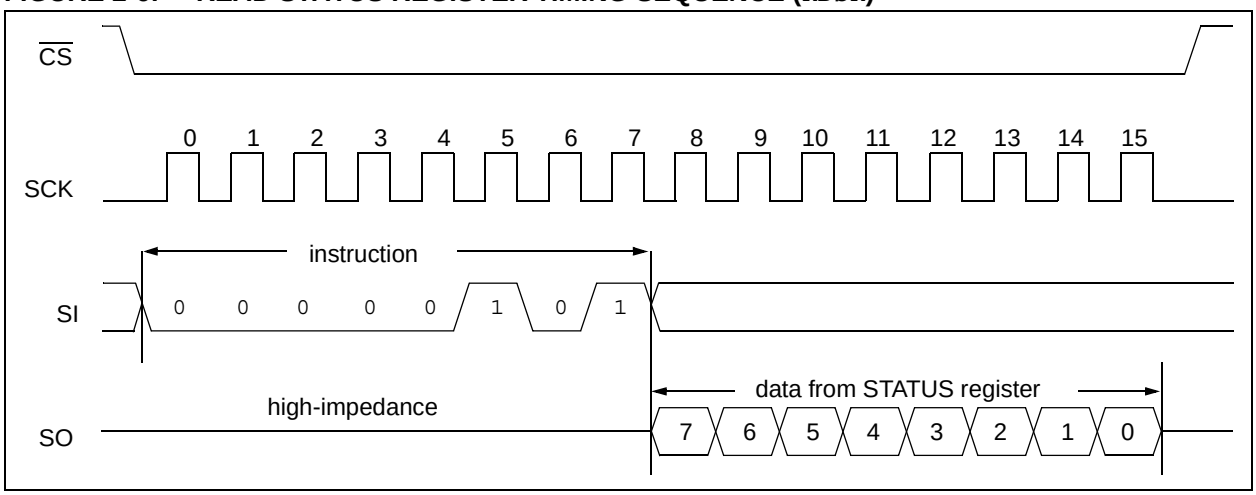

© 2005 Microchip Technology Inc.

2.6 Write Status Register Instruction (WRSR)

The Write Status Register instruction (WRSR) allows the user to write to the nonvolatile bits in the STATUS register as shown in Table 2-2. The user is able to select one of four levels of protection for the array by writing to the appropriate bits in the STATUS register. The array is divided up into four segments. The user has the ability to write-protect none, one, two, or all four of the segments of the array. The partitioning is controlled as shown in Table 2-3.

The Write-Protect Enable (WPEN) bit is a nonvolatile bit that is available as an enable bit for the $\overline{WP}$ pin. The Write-Protect ($\overline{WP}$) pin and the Write-Protect Enable (WPEN) bit in the STATUS register control the programmable hardware write-protect feature. Hardware write protection is enabled when $\overline{WP}$ pin is low and the WPEN bit is high. Hardware write protection is disabled when either the $\overline{WP}$ pin is high or the WPEN bit is low. When the chip is hardware write-protected, only writes to nonvolatile bits in the STATUS register are disabled. See Table 2-4 for a matrix of functionality on the WPEN bit.

See Figure 2-7 for the WRSR timing sequence.

TABLE 2-3: ARRAY PROTECTION

BP1	BP0	Array Addresses Write-Protected
0	0	none
0	1	upper 1/4 (6000h-7FFFh)
1	0	upper 1/2 (4000h-7FFFh)
1	1	all (0000h-7FFFh)

FIGURE 2-7: WRITE STATUS REGISTER TIMING SEQUENCE (WRSR)

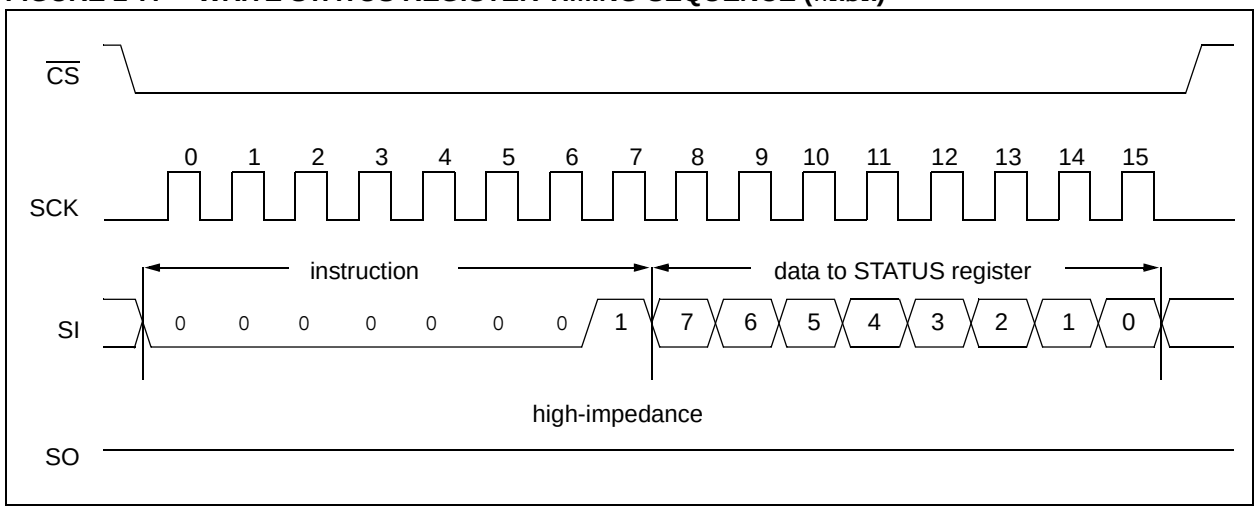

Note: An internal write cycle (TWC) is initiated on the rising edge of $\overline{CS}$ after a valid write STATUS register sequence.

2.7 Data Protection

The following protection has been implemented to prevent inadvertent writes to the array:

- The write enable latch is reset on power-up
- A write enable instruction must be issued to set the write enable latch
- After a byte write, page write or STATUS register write, the write enable latch is reset
- $\overline{CS}$ must be set high after the proper number of clock cycles to start an internal write cycle
- Access to the array during an internal write cycle is ignored and programming is continued

2.8 Power-On State

The 25XX256 powers on in the following state:

- The device is in low-power Standby mode ($\overline{CS}$ = 1)
- The write enable latch is reset
- SO is in high-impedance state
- A high-to-low-level transition on $\overline{CS}$ is required to enter active state

TABLE 2-4: WRITE-PROTECT FUNCTIONALITY MATRIX

WEL (SR bit 1)	WPEN (SR bit 7)	$\overline{WP}$ pin	Protected Blocks	Unprotected Blocks	STATUS Register
0	x	x	Protected	Protected	Protected
1	0	x	Protected	Writable	Writable
1	1	0 (low)	Protected	Writable	Protected
1	1	1 (high)	Protected	Writable	Writable

x = don't care

© 2005 Microchip Technology Inc.

3.0 PIN DESCRIPTIONS

The descriptions of the pins are listed in Table 3-1.

TABLE 3-1: PIN FUNCTION TABLE

Name	PDIP/SOIC TSSOP/DFN	Rotated TSSOP	Function
$\overline{CS}$	1	3	Chip Select Input
SO	2	4	Serial Data Output
$\overline{WP}$	3	5	Write-Protect Pin
VSS	4	6	Ground
SI	5	7	Serial Data Input
SCK	6	8	Serial Clock Input
$\overline{HOLD}$	7	1	Hold Input
VCC	8	2	Supply Voltage

3.1 Chip Select ($\overline{CS}$)

A low level on this pin selects the device. A high level deselects the device and forces it into Standby mode. However, a programming cycle which is already initiated or in progress will be completed, regardless of the $\overline{CS}$ input signal. If $\overline{CS}$ is brought high during a program cycle, the device will go into Standby mode as soon as the programming cycle is complete. When the device is deselected, SO goes to the high-impedance state, allowing multiple parts to share the same SPI bus. A low-to-high transition on $\overline{CS}$ after a valid write sequence initiates an internal write cycle. After power-up, a low level on $\overline{CS}$ is required prior to any sequence being initiated.

3.2 Serial Output (SO)

The SO pin is used to transfer data out of the 25XX256. During a read cycle, data is shifted out on this pin after the falling edge of the serial clock.

3.3 Write-Protect ($\overline{WP}$)

This pin is used in conjunction with the WPEN bit in the STATUS register to prohibit writes to the nonvolatile bits in the STATUS register. When $\overline{WP}$ is low and WPEN is high, writing to the nonvolatile bits in the STATUS register is disabled. All other operations function normally. When $\overline{WP}$ is high, all functions, including writes to the nonvolatile bits in the STATUS register, operate normally. If the WPEN bit is set, $\overline{WP}$ low during a STATUS register write sequence will disable writing to the STATUS register. If an internal write cycle has already begun, $\overline{WP}$ going low will have no effect on the write.

The $\overline{WP}$ pin function is blocked when the WPEN bit in the STATUS register is low. This allows the user to install the 25XX256 in a system with $\overline{WP}$ pin grounded and still be able to write to the STATUS register. The $\overline{WP}$ pin functions will be enabled when the WPEN bit is set high.

3.4 Serial Input (SI)

The SI pin is used to transfer data into the device. It receives instructions, addresses and data. Data is latched on the rising edge of the serial clock.

3.5 Serial Clock (SCK)

The SCK is used to synchronize the communication between a master and the 25XX256. Instructions, addresses or data present on the SI pin are latched on the rising edge of the clock input, while data on the SO pin is updated after the falling edge of the clock input.

3.6 Hold ($\overline{HOLD}$)

The $\overline{HOLD}$ pin is used to suspend transmission to the 25XX256 while in the middle of a serial sequence without having to retransmit the entire sequence again. It must be held high any time this function is not being used. Once the device is selected and a serial sequence is underway, the $\overline{HOLD}$ pin may be pulled low to pause further serial communication without resetting the serial sequence. The $\overline{HOLD}$ pin must be brought low while SCK is low, otherwise the HOLD function will not be invoked until the next SCK high-to-low transition. The 25XX256 must remain selected during this sequence. The SI, SCK and SO pins are in a high-impedance state during the time the device is paused and transitions on these pins will be ignored. To resume serial communication, $\overline{HOLD}$ must be brought high while the SCK pin is low, otherwise serial communication will not resume. Lowering the HOLD line at any time will tri-state the SO line.

4.0 PACKAGING INFORMATION

4.1 Package Marking Information

8-Lead DFN

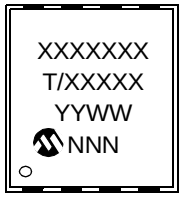

Example:

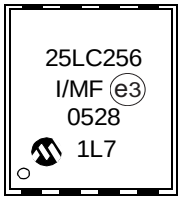

8-Lead PDIP

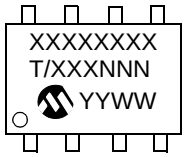

Example:

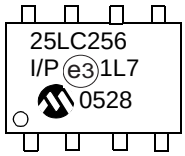

8-Lead SOIC (150 mil)

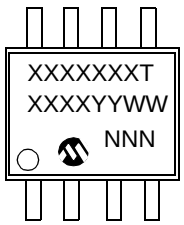

Example:

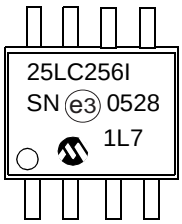

8-Lead SOIC (208 mil)

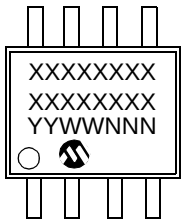

Example:

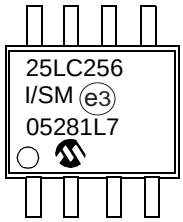

8-Lead TSSOP

Example:

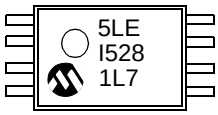

TSSOP 1st Line Marking Codes		
Device	**Standard**	**Rotated**
25AA256	5AE	5AEX
25LC256	5LE	5LEX

Legend:	XX...X	Part number or part number code
	T	Temperature (I, E)
	Y	Year code (last digit of calendar year)
	YY	Year code (last 2 digits of calendar year)
	WW	Week code (week of January 1 is week ‘01’)
	NNN	Alphanumeric traceability code (2 characters for small packages)
	e3	Pb-free JEDEC designator for Matte Tin (Sn)

Note: For very small packages with no room for the Pb-free JEDEC designator e3 , the marking will only appear on the outer carton or reel label.

Note: In the event the full Microchip part number cannot be marked on one line, it will be carried over to the next line, thus limiting the number of available characters for customer-specific information.

© 2005 Microchip Technology Inc.

8-Lead Plastic Dual Flat No Lead Package (MF) 6x5 mm Body (DFN-S)

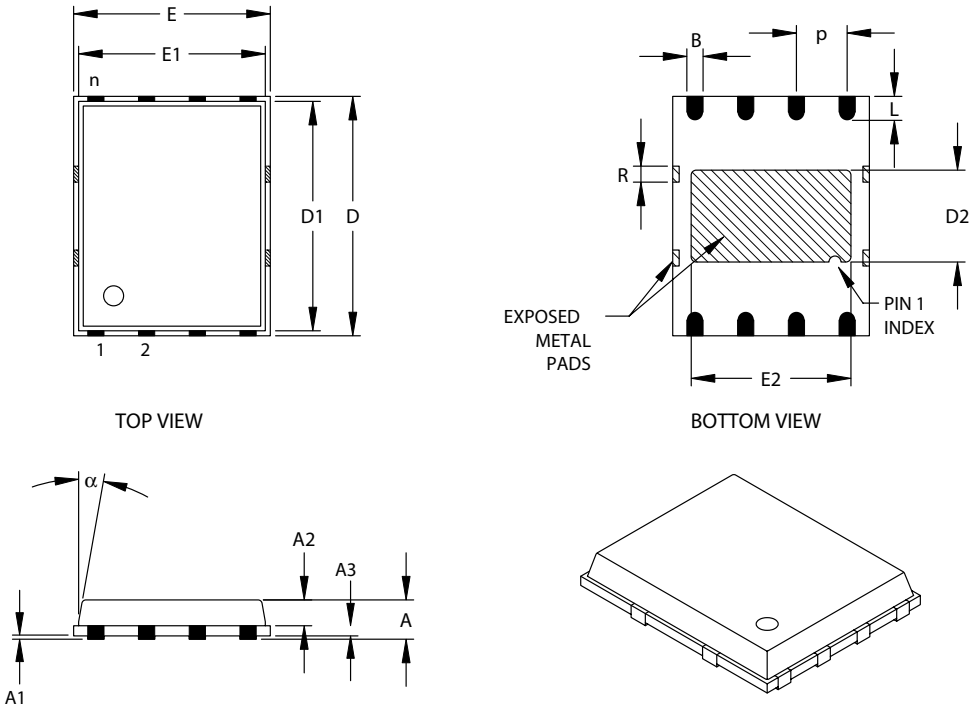

Units		INCHES			MILLIMETERS*		
Dimension Limits		MIN	NOM	MAX	MIN	NOM	MAX
Number of Pins	n		8			8	
Pitch	p		.050 BSC			1.27 BSC	
Overall Height	A		.033	.039		0.85	1.00
Molded Package Thickness	A2		.026	.031		0.65	0.80
Standoff	A1	.000	.0004	.002	0.00	0.01	0.05
Base Thickness	A3		.008 REF.			0.20 REF.	
Overall Length	E		.194 BSC			4.92 BSC	
Molded Package Length	E1		.184 BSC			4.67 BSC	
Exposed Pad Length	E2	.152	.158	.163	3.85	4.00	4.15
Overall Width	D		.236 BSC			5.99 BSC	
Molded Package Width	D1		.226 BSC			5.74 BSC	
Exposed Pad Width	D2	.085	.091	.097	2.16	2.31	2.46
Lead Width	B	.014	.016	.019	0.35	0.40	0.47
Lead Length	L	.020	.024	.030	0.50	0.60	0.75
Tie Bar Width	R		.014			.356	
Mold Draft Angle Top	α			12°			12°

*Controlling Parameter

Notes:

Dimensions D and E1 do not include mold flash or protrusions. Mold flash or protrusions shall not exceed .010" (0.254mm) per side.

JEDEC equivalent: Pending

Drawing No. C04-113

8-Lead Plastic Dual In-line (P) – 300 mil (PDIP)

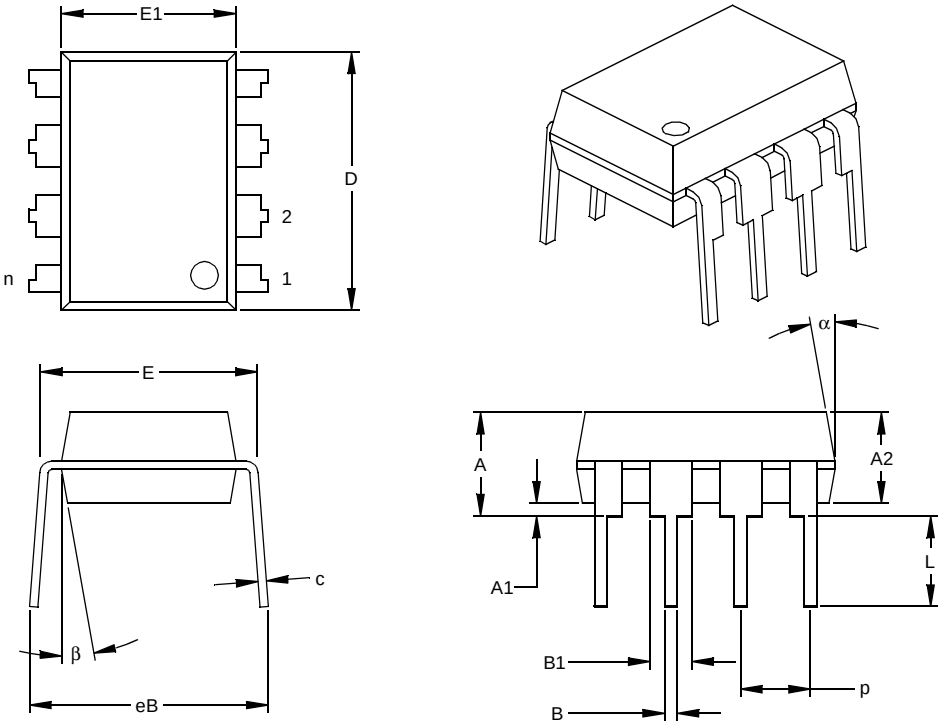

Units		INCHES*			MILLIMETERS		
Dimension Limits		MIN	NOM	MAX	MIN	NOM	MAX
Number of Pins	n		8			8	
Pitch	p		.100			2.54	
Top to Seating Plane	A	.140	.155	.170	3.56	3.94	4.32
Molded Package Thickness	A2	.115	.130	.145	2.92	3.30	3.68
Base to Seating Plane	A1	.015			0.38		
Shoulder to Shoulder Width	E	.300	.313	.325	7.62	7.94	8.26
Molded Package Width	E1	.240	.250	.260	6.10	6.35	6.60
Overall Length	D	.360	.373	.385	9.14	9.46	9.78
Tip to Seating Plane	L	.125	.130	.135	3.18	3.30	3.43
Lead Thickness	c	.008	.012	.015	0.20	0.29	0.38
Upper Lead Width	B1	.045	.058	.070	1.14	1.46	1.78
Lower Lead Width	B	.014	.018	.022	0.36	0.46	0.56
Overall Row Spacing §	eB	.310	.370	.430	7.87	9.40	10.92
Mold Draft Angle Top	α	5	10	15	5	10	15
Mold Draft Angle Bottom	β	5	10	15	5	10	15

* Controlling Parameter
§ Significant Characteristic

Notes:
Dimensions D and E1 do not include mold flash or protrusions. Mold flash or protrusions shall not exceed .010” (0.254mm) per side.
JEDEC Equivalent: MS-001
Drawing No. C04-018

© 2005 Microchip Technology Inc.

8-Lead Plastic Small Outline (SN) – Narrow, 150 mil (SOIC)

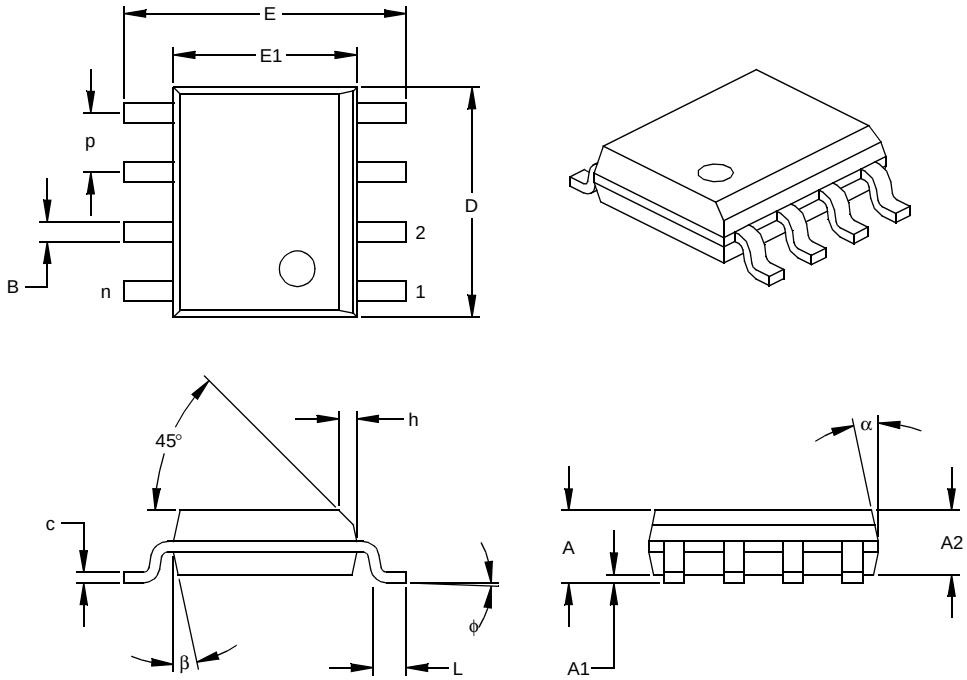

Units		INCHES*			MILLIMETERS		
Dimension Limits		MIN	NOM	MAX	MIN	NOM	MAX
Number of Pins	n		8			8	
Pitch	p		.050			1.27	
Overall Height	A	.053	.061	.069	1.35	1.55	1.75
Molded Package Thickness	A2	.052	.056	.061	1.32	1.42	1.55
Standoff §	A1	.004	.007	.010	0.10	0.18	0.25
Overall Width	E	.228	.237	.244	5.79	6.02	6.20
Molded Package Width	E1	.146	.154	.157	3.71	3.91	3.99
Overall Length	D	.189	.193	.197	4.80	4.90	5.00
Chamfer Distance	h	.010	.015	.020	0.25	0.38	0.51
Foot Length	L	.019	.025	.030	0.48	0.62	0.76
Foot Angle	φ	0	4	8	0	4	8
Lead Thickness	c	.008	.009	.010	0.20	0.23	0.25
Lead Width	B	.013	.017	.020	0.33	0.42	0.51
Mold Draft Angle Top	α	0	12	15	0	12	15
Mold Draft Angle Bottom	β	0	12	15	0	12	15

* Controlling Parameter
§ Significant Characteristic

Notes:
Dimensions D and E1 do not include mold flash or protrusions. Mold flash or protrusions shall not exceed .010” (0.254mm) per side.
JEDEC Equivalent: MS-012
Drawing No. C04-057

8-Lead Plastic Small Outline (SM) – Medium, 208 mil Body (SOIJ)

(JEITA/EIAJ Standard, Formerly called SOIC)

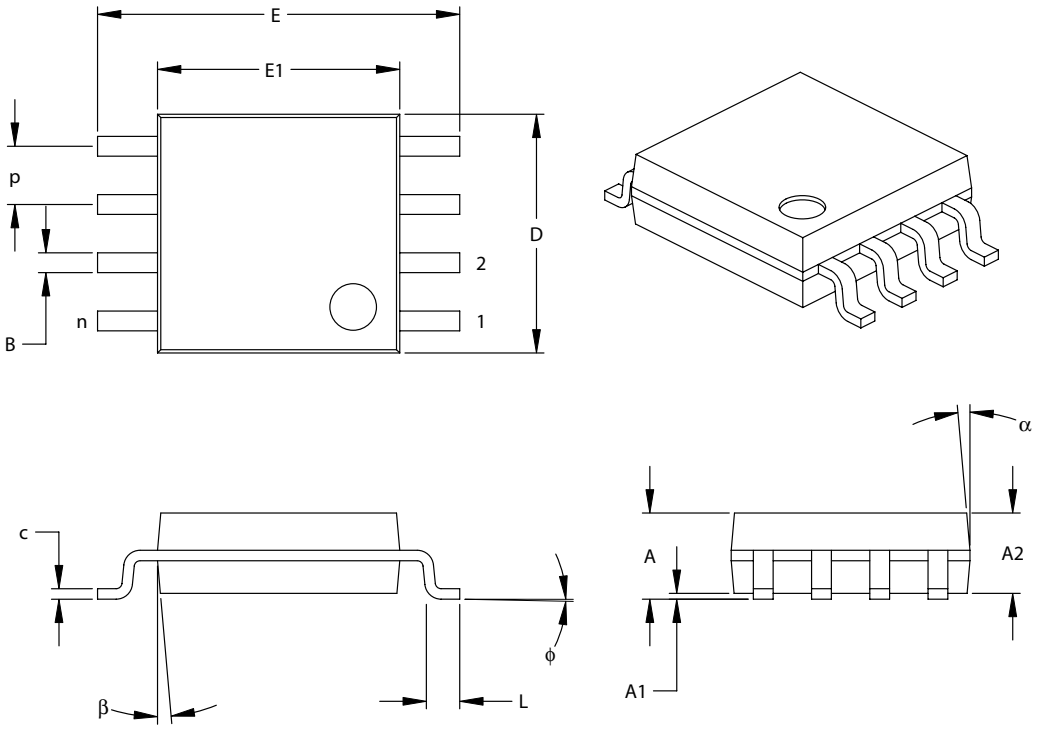

Units		INCHES*			MILLIMETERS		
Dimension Limits		MIN	NOM	MAX	MIN	NOM	MAX
Number of Pins	n		8			8	
Pitch	p		.050			1.27	
Overall Height	A	.070	.075	.080	1.78	1.97	2.03
Molded Package Thickness	A2	.069	.074	.078	1.75	1.88	1.98
Standoff	A1	.002	.005	.010	0.05	0.13	0.25
Overall Width	E	.300	.313	.325	7.62	7.95	8.26
Molded Package Width	E1	.201	.208	.212	5.11	5.28	5.38
Overall Length	D	.202	.205	.210	5.13	5.21	5.33
Foot Length	L	.020	.025	.030	0.51	0.64	0.76
Foot Angle	ϕ	0	4	8	0	4	8
Lead Thickness	c	.008	.009	.010	0.20	0.23	0.25
Lead Width	B	.014	.017	.020	0.36	0.43	0.51
Mold Draft Angle Top	α	0	12	15	0	12	15
Mold Draft Angle Bottom	β	0	12	15	0	12	15

*Controlling Parameter

Notes:

Dimensions D and E1 do not include mold flash or protrusions. Mold flash or protrusions shall not exceed .010" (0.254mm) per side.

Drawing No. C04-056

© 2005 Microchip Technology Inc.

8-Lead Plastic Thin Shrink Small Outline (ST) – 4.4 mm (TSSOP)

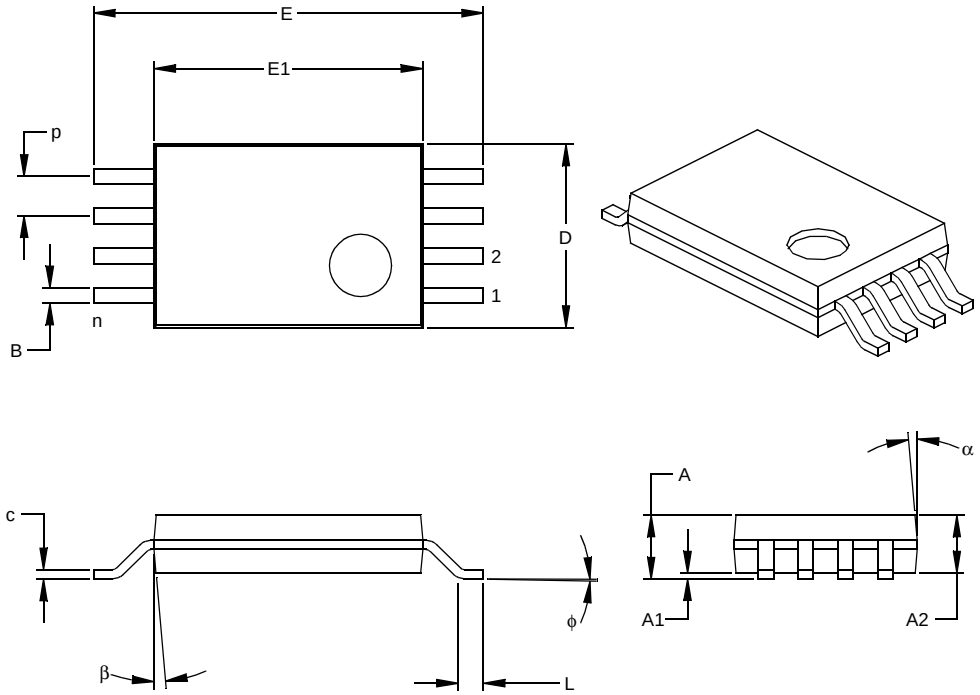

Units		INCHES			MILLIMETERS*		
Dimension Limits		MIN	NOM	MAX	MIN	NOM	MAX
Number of Pins	n		8			8	
Pitch	p		.026			0.65	
Overall Height	A			.043			1.10
Molded Package Thickness	A2	.033	.035	.037	0.85	0.90	0.95
Standoff §	A1	.002	.004	.006	0.05	0.10	0.15
Overall Width	E	.246	.251	.256	6.25	6.38	6.50
Molded Package Width	E1	.169	.173	.177	4.30	4.40	4.50
Molded Package Length	D	.114	.118	.122	2.90	3.00	3.10
Foot Length	L	.020	.024	.028	0.50	0.60	0.70
Foot Angle	φ	0	4	8	0	4	8
Lead Thickness	c	.004	.006	.008	0.09	0.15	0.20
Lead Width	B	.007	.010	.012	0.19	0.25	0.30
Mold Draft Angle Top	α	0	5	10	0	5	10
Mold Draft Angle Bottom	β	0	5	10	0	5	10

* Controlling Parameter
§ Significant Characteristic

Notes:
Dimensions D and E1 do not include mold flash or protrusions. Mold flash or protrusions shall not exceed .005” (0.127mm) per side.
JEDEC Equivalent: MO-153
Drawing No. C04-086

APPENDIX A: REVISION HISTORY

Revision C (11/03)

Corrections to Section 1.0, Electrical Characteristics.

Revision D (06/05)

Update package information

Revision E (08/05)

Remove Preliminary status. Revise Table 1-1, Params. D011 and D012.

© 2005 Microchip Technology Inc.

THE MICROCHIP WEB SITE

Microchip provides online support via our WWW site at www.microchip.com. This web site is used as a means to make files and information easily available to customers. Accessible by using your favorite Internet browser, the web site contains the following information:

- **Product Support** – Data sheets and errata, application notes and sample programs, design resources, user's guides and hardware support documents, latest software releases and archived software
- **General Technical Support** – Frequently Asked Questions (FAQ), technical support requests, online discussion groups, Microchip consultant program member listing
- **Business of Microchip** – Product selector and ordering guides, latest Microchip press releases, listing of seminars and events, listings of Microchip sales offices, distributors and factory representatives

CUSTOMER CHANGE NOTIFICATION SERVICE

Microchip's customer notification service helps keep customers current on Microchip products. Subscribers will receive e-mail notification whenever there are changes, updates, revisions or errata related to a specified product family or development tool of interest.

To register, access the Microchip web site at www.microchip.com, click on Customer Change Notification and follow the registration instructions.

CUSTOMER SUPPORT

Users of Microchip products can receive assistance through several channels:

- Distributor or Representative
- Local Sales Office
- Field Application Engineer (FAE)
- Technical Support
- Development Systems Information Line

Customers should contact their distributor, representative or field application engineer (FAE) for support. Local sales offices are also available to help customers. A listing of sales offices and locations is included in the back of this document.

Technical support is available through the web site at: http://support.microchip.com

READER RESPONSE

It is our intention to provide you with the best documentation possible to ensure successful use of your Microchip product. If you wish to provide your comments on organization, clarity, subject matter, and ways in which our documentation can better serve you, please FAX your comments to the Technical Publications Manager at (480) 792-4150.

Please list the following information, and use this outline to provide us with your comments about this document.

To: Technical Publications Manager Total Pages Sent _____

RE: Reader Response

From: Name _____

Company _____

Address _____

City / State / ZIP / Country _____

Telephone: (_____) _____ - _____ FAX: (_____) _____ - _____

Application (optional):

Would you like a reply?____Y ____N

Device: 25AA256/25LC256 Literature Number: DS21822E

Questions:

1. What are the best features of this document?

_____

_____

2. How does this document meet your hardware and software development needs?

_____

_____

3. Do you find the organization of this document easy to follow? If not, why?

_____

_____

4. What additions to the document do you think would enhance the structure and subject?

_____

_____

5. What deletions from the document could be made without affecting the overall usefulness?

_____

_____

6. Is there any incorrect or misleading information (what and where)?

_____

_____

7. How would you improve this document?

_____

_____

© 2005 Microchip Technology Inc.

PRODUCT IDENTIFICATION SYSTEM

To order or obtain information, e.g., on pricing or delivery, refer to the factory or the listed sales office.

PART NO.	X	–	X	/XX
Device	Tape & Reel		Temp Range	Package

Device:	25AA256		256k-bit, 1.8V, 64-Byte Page, SPI Serial EEPROM
	25LC256		256k-bit, 2.5V, 64-Byte Page, SPI Serial EEPROM
	25AA256X		256k-bit, 1.8V, 64-Byte Page, SPI Serial EEPROM, rotated pinout (ST only)
	25LC256X		256k-bit, 2.5V, 64-Byte Page, SPI Serial EEPROM, rotated pinout (ST only)
Tape & Reel:	Blank	=	Standard packaging (tube)
	T	=	Tape & Reel
Temperature Range:	I	=	-40°C to+85°C
	E	=	-40°C to+125°C
Package:	MF	=	Micro Lead Frame (6 x 5 mm body), 8-lead
	P	=	Plastic DIP (300 mil body), 8-lead
	SN	=	Plastic SOIC (150 mil body), 8-lead
	ST	=	TSSOP, 8-lead
	SM	=	Plastic SOIC (208 mil body), 8-lead

Examples:

a) 25AA256T-I/SN = 256k-bit, 1.8V Serial EEPROM, Industrial temp., Tape & Reel, SOIC package

b) 25AA256T-I/ST = 256k-bit, 1.8V Serial EEPROM, Industrial temp., Tape & Reel, TSSOP package

c) 25LC256-I/P = 256k-bit, 2.5V Serial EEPROM, Industrial temp., P-DIP package

d) 25LC256T-E/ST = 256k-bit, 2.5V Serial EEPROM, Extended temp., Tape & Reel, TSSOP package

e) 25LC256XT-I/ST = 256k-bit, 2.5V Serial EEPROM, Industrial temp., Tape and Reel, Rotated TSSOP package

Sales and Support

Data Sheets
Products supported by a preliminary Data Sheet may have an errata sheet describing minor operational differences and recommended workarounds. To determine if an errata sheet exists for a particular device, please contact one of the following:

1. Your local Microchip sales office
2. The Microchip Corporate Literature Center U.S. FAX: (480) 792-7277
3. The Microchip Worldwide Site (www.microchip.com)

Please specify which device, revision of silicon and Data Sheet (include Literature #) you are using.

New Customer Notification System
Register on our web site (www.microchip.com/cn) to receive the most current information on our products.

NOTES:

© 2005 Microchip Technology Inc.

Note the following details of the code protection feature on Microchip devices:

- Microchip products meet the specification contained in their particular Microchip Data Sheet.
- Microchip believes that its family of products is one of the most secure families of its kind on the market today, when used in the intended manner and under normal conditions.
- There are dishonest and possibly illegal methods used to breach the code protection feature. All of these methods, to our knowledge, require using the Microchip products in a manner outside the operating specifications contained in Microchip's Data Sheets. Most likely, the person doing so is engaged in theft of intellectual property.
- Microchip is willing to work with the customer who is concerned about the integrity of their code.
- Neither Microchip nor any other semiconductor manufacturer can guarantee the security of their code. Code protection does not mean that we are guaranteeing the product as "unbreakable."

Code protection is constantly evolving. We at Microchip are committed to continuously improving the code protection features of our products. Attempts to break Microchip's code protection feature may be a violation of the Digital Millennium Copyright Act. If such acts allow unauthorized access to your software or other copyrighted work, you may have a right to sue for relief under that Act.

Information contained in this publication regarding device applications and the like is provided only for your convenience and may be superseded by updates. It is your responsibility to ensure that your application meets with your specifications. MICROCHIP MAKES NO REPRESENTATIONS OR WARRANTIES OF ANY KIND WHETHER EXPRESS OR IMPLIED, WRITTEN OR ORAL, STATUTORY OR OTHERWISE, RELATED TO THE INFORMATION, INCLUDING BUT NOT LIMITED TO ITS CONDITION, QUALITY, PERFORMANCE, MERCHANTABILITY OR FITNESS FOR PURPOSE**.** Microchip disclaims all liability arising from this information and its use. Use of Microchip's products as critical components in life support systems is not authorized except with express written approval by Microchip. No licenses are conveyed, implicitly or otherwise, under any Microchip intellectual property rights.

Trademarks

The Microchip name and logo, the Microchip logo, Accuron, dsPIC, KEELOQ, microID, MPLAB, PIC, PICmicro, PICSTART, PRO MATE, PowerSmart, rfPIC, and SmartShunt are registered trademarks of Microchip Technology Incorporated in the U.S.A. and other countries.

AmpLab, FilterLab, Migratable Memory, MXDEV, MXLAB, PICMASTER, SEEVAL, SmartSensor and The Embedded Control Solutions Company are registered trademarks of Microchip Technology Incorporated in the U.S.A.

Analog-for-the-Digital Age, Application Maestro, dsPICDEM, dsPICDEM.net, dsPICworks, ECAN, ECONOMONITOR, FanSense, FlexROM, fuzzyLAB, In-Circuit Serial Programming, ICSP, ICEPIC, Linear Active Thermistor, MPASM, MPLIB, MPLINK, MPSIM, PICkit, PICDEM, PICDEM.net, PICLAB, PICtail, PowerCal, PowerInfo, PowerMate, PowerTool, rfLAB, rfPICDEM, Select Mode, Smart Serial, SmartTel, Total Endurance and WiperLock are trademarks of Microchip Technology Incorporated in the U.S.A. and other countries.

SQTP is a service mark of Microchip Technology Incorporated in the U.S.A.

All other trademarks mentioned herein are property of their respective companies.

© 2005, Microchip Technology Incorporated, Printed in the U.S.A., All Rights Reserved.

Printed on recycled paper.

QUALITY MANAGEMENT SYSTEM CERTIFIED BY DNV

ISO/TS 16949:2002

Microchip received ISO/TS-16949:2002 quality system certification for its worldwide headquarters, design and wafer fabrication facilities in Chandler and Tempe, Arizona and Mountain View, California in October 2003. The Company's quality system processes and procedures are for its PICmicro® 8-bit MCUs, KEELOQ® code hopping devices, Serial EEPROMs, microperipherals, nonvolatile memory and analog products. In addition, Microchip's quality system for the design and manufacture of development systems is ISO 9001:2000 certified.

WORLDWIDE SALES AND SERVICE

AMERICAS

Corporate Office
2355 West Chandler Blvd.
Chandler, AZ 85224-6199
Tel: 480-792-7200
Fax: 480-792-7277
Technical Support:
http://support.microchip.com
Web Address:
www.microchip.com

Atlanta
Alpharetta, GA
Tel: 770-640-0034
Fax: 770-640-0307

Boston
Westborough, MA
Tel: 774-760-0087
Fax: 774-760-0088

Chicago
Itasca, IL
Tel: 630-285-0071
Fax: 630-285-0075

Dallas
Addison, TX
Tel: 972-818-7423
Fax: 972-818-2924

Detroit
Farmington Hills, MI
Tel: 248-538-2250
Fax: 248-538-2260

Kokomo
Kokomo, IN
Tel: 765-864-8360
Fax: 765-864-8387

Los Angeles
Mission Viejo, CA
Tel: 949-462-9523
Fax: 949-462-9608

San Jose
Mountain View, CA
Tel: 650-215-1444
Fax: 650-961-0286

Toronto
Mississauga, Ontario,
Canada
Tel: 905-673-0699
Fax: 905-673-6509

ASIA/PACIFIC

Australia - Sydney
Tel: 61-2-9868-6733
Fax: 61-2-9868-6755

China - Beijing
Tel: 86-10-8528-2100
Fax: 86-10-8528-2104

China - Chengdu
Tel: 86-28-8676-6200
Fax: 86-28-8676-6599

China - Fuzhou
Tel: 86-591-8750-3506
Fax: 86-591-8750-3521

China - Hong Kong SAR
Tel: 852-2401-1200
Fax: 852-2401-3431

China - Qingdao
Tel: 86-532-8502-7355
Fax: 86-532-8502-7205

China - Shanghai
Tel: 86-21-5407-5533
Fax: 86-21-5407-5066

China - Shenyang
Tel: 86-24-2334-2829
Fax: 86-24-2334-2393

China - Shenzhen
Tel: 86-755-8203-2660
Fax: 86-755-8203-1760

China - Shunde
Tel: 86-757-2839-5507
Fax: 86-757-2839-5571

China - Wuhan
Tel: 86-27-5980-5300
Fax: 86-27-5980-5118

China - Xian
Tel: 86-29-8833-7250
Fax: 86-29-8833-7256

ASIA/PACIFIC

India - Bangalore
Tel: 91-80-2229-0061
Fax: 91-80-2229-0062

India - New Delhi
Tel: 91-11-5160-8631
Fax: 91-11-5160-8632

India - Pune
Tel: 91-20-2566-1512
Fax: 91-20-2566-1513

Japan - Yokohama
Tel: 81-45-471- 6166
Fax: 81-45-471-6122

Korea - Gumi
Tel: 82-54-473-4301
Fax: 82-54-473-4302

Korea - Seoul
Tel: 82-2-554-7200
Fax: 82-2-558-5932 or
82-2-558-5934

Malaysia - Penang
Tel: 604-646-8870
Fax: 604-646-5086

Philippines - Manila
Tel: 632-634-9065
Fax: 632-634-9069

Singapore
Tel: 65-6334-8870
Fax: 65-6334-8850

Taiwan - Hsin Chu
Tel: 886-3-572-9526
Fax: 886-3-572-6459

Taiwan - Kaohsiung
Tel: 886-7-536-4818
Fax: 886-7-536-4803

Taiwan - Taipei
Tel: 886-2-2500-6610
Fax: 886-2-2508-0102

Thailand - Bangkok
Tel: 66-2-694-1351
Fax: 66-2-694-1350

EUROPE

Austria - Weis
Tel: 43-7242-2244-399
Fax: 43-7242-2244-393

Denmark - Copenhagen
Tel: 45-4450-2828
Fax: 45-4485-2829

France - Paris
Tel: 33-1-69-53-63-20
Fax: 33-1-69-30-90-79

Germany - Munich
Tel: 49-89-627-144-0
Fax: 49-89-627-144-44

Italy - Milan
Tel: 39-0331-742611
Fax: 39-0331-466781

Netherlands - Drunen
Tel: 31-416-690399
Fax: 31-416-690340

Spain - Madrid
Tel: 34-91-352-30-52
Fax: 34-91-352-11-47

UK - Wokingham
Tel: 44-118-921-5869
Fax: 44-118-921-5820

08/24/05

© 2005 Microchip Technology Inc.