BURR - BROWN®

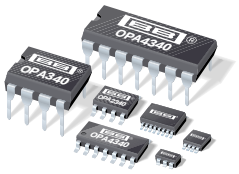

OPA340
OPA2340
OPA4340

SINGLE-SUPPLY, RAIL-TO-RAIL OPERATIONAL AMPLIFIERS
*Micro*Amplifier™ Series

FEATURES

- RAIL-TO-RAIL INPUT
- RAIL-TO-RAIL OUTPUT (within 1mV)
- *Micro*SIZE PACKAGES
- WIDE BANDWIDTH: 5.5MHz
- HIGH SLEW RATE: 6V/µs
- LOW THD+NOISE: 0.0007% (f = 1kHz)
- LOW QUIESCENT CURRENT: 750µA/channel
- SINGLE, DUAL, AND QUAD

APPLICATIONS

- DRIVING A/D CONVERTERS
- PCMCIA CARDS
- DATA ACQUISITION
- PROCESS CONTROL
- AUDIO PROCESSING
- COMMUNICATIONS
- ACTIVE FILTERS
- TEST EQUIPMENT

DESCRIPTION

OPA340 series rail-to-rail CMOS operational amplifiers are optimized for low voltage, single supply operation. Rail-to-rail input/output and high speed operation make them ideal for driving sampling analog-to-digital converters. They are also well suited for general purpose and audio applications as well as providing I/V conversion at the output of D/A converters. Single, dual, and quad versions have identical specifications for design flexibility.

The OPA340 series operates on a single supply as low as 2.5V with an input common-mode voltage range that extends 500mV below ground and 500mV above the positive supply. Output voltage swing is to within 1mV of the supply rails with a 100kΩ load. They offer excellent dynamic response (BW = 5.5MHz, SR = 6V/µs), yet quiescent current is only 750µA. Dual and quad designs feature completely independent circuitry for lowest crosstalk and freedom from interaction.

The single (OPA340) packages are the tiny 5-lead SOT-23-5 surface mount, SO-8 surface mount, and 8-pin DIP. The dual (OPA2340) comes in the miniature MSOP-8 surface mount, SO-8 surface mount, and 8-pin DIP packages. The quad (OPA4340) packages are the space-saving SSOP-16 surface mount, SO-14 surface mount, and the 14-pin DIP. All are specified from –40°C to +85°C and operate from –55°C to +125°C. A SPICE macromodel is available for design analysis.

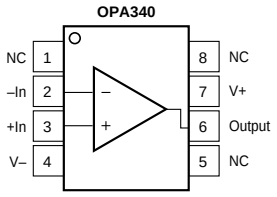

8-Pin DIP, SO-8

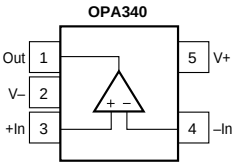

SOT-23-5

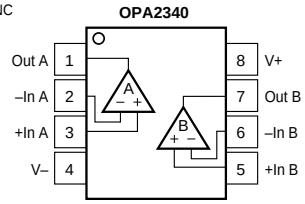

8-Pin DIP, SO-8, MSOP-8

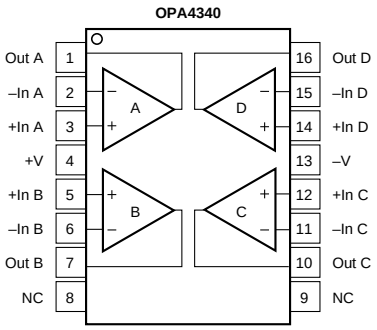

SSOP-16

International Airport Industrial Park • Mailing Address: PO Box 11400, Tucson, AZ 85734 • Street Address: 6730 S. Tucson Blvd., Tucson, AZ 85706 • Tel: (520) 746-1111 • Twx: 910-952-1111
Internet: http://www.burr-brown.com/ • FAXLine: (800) 548-6133 (US/Canada Only) • Cable: BBRCORP • Telex: 066-6491 • FAX: (520) 889-1510 • Immediate Product Info: (800) 548-6132

© 1997 Burr-Brown Corporation
PDS-1404C
Printed in U.S.A. December, 1997

SBOS073

SPECIFICATIONS: V_S = 2.7V to 5V

At T_A = +25°C, R_L = 10kΩ connected to V_S/2 and V_{OUT} = V_S/2, unless otherwise noted.
Boldface limits apply over the specified temperature range, T_A = –40°C to +85°C. V_S = 5V.

PARAMETER		CONDITION	OPA340NA, PA, UA OPA2340EA, PA, UA OPA4340EA, PA, UA MIN	TYP[1]	MAX	UNITS
OFFSET VOLTAGE						
Input Offset Voltage	V_{OS}	V_S = 5V		±150	±500	µV
vs Temperature	dV_{OS}/dT			**±2.5**		µV/°C
vs Power Supply	PSRR	V_S = 2.7V to 5.5V, V_{CM} = 0V		30	120	µV/V
T_A = –40°C to +85°C		V_S = 2.7V to 5.5V, V_{CM} = 0V			**120**	µV/V
Channel Separation, dc				0.2		µV/V
INPUT BIAS CURRENT						
Input Bias Current	I_B			±0.2	±10	pA
T_A = –40°C to +85°C					**±60**	pA
Input Offset Current	I_{OS}			±0.2	±10	pA
NOISE						
Input Voltage Noise, f = 0.1 to 50kHz				8		µVrms
Input Voltage Noise Density, f = 1kHz	e_n			25		nV/√Hz
Current Noise Density, f = 1kHz	i_n			3		fA/√Hz
INPUT VOLTAGE RANGE						
Common-Mode Voltage Range	V_{CM}		–0.3		(V+) +0.3	V
Common-Mode Rejection Ratio	CMRR	–0.3V < V_{CM} < (V+) –1.8V	80	92		dB
		V_S = 5V, –0.3V < V_{CM} < 5.3V	70	84		dB
		V_S = 2.7V, –0.3V < V_{CM} < 3V	66	80		dB
INPUT IMPEDANCE						
Differential				10^{13} || 3		Ω || pF
Common-Mode				10^{13} || 6		Ω || pF
OPEN-LOOP GAIN						
Open-Loop Voltage Gain	A_{OL}	R_L = 100kΩ, 5mV < V_O < (V+) –5mV	106	124		dB
T_A = –40°C to +85°C		R_L = 100kΩ, 5mV < V_O < (V+) –5mV	**106**			dB
		R_L = 10kΩ, 50mV < V_O < (V+) –50mV	100	120		dB
T_A = –40°C to +85°C		R_L = 10kΩ, 50mV < V_O < (V+) –50mV	**100**			dB
		R_L = 2kΩ, 200mV < V_O < (V+) –200mV	94	114		dB
T_A = –40°C to +85°C		R_L = 2kΩ, 200mV < V_O < (V+) –200mV	**94**			dB
FREQUENCY RESPONSE						
Gain-Bandwidth Product	GBW	G = 1		5.5		MHz
Slew Rate	SR	V_S = 5V, G = 1, C_L = 100pF		6		V/µs
Settling Time, 0.1%		V_S = 5V, 2V Step, C_L = 100pF		1		µs
0.01%		V_S = 5V, 2V Step, C_L = 100pF		1.6		µs
Overload Recovery Time		V_{IN} • G = V_S		0.2		µs
Total Harmonic Distortion + Noise	THD+N	V_S = 5V, V_O = 3Vp-p[2], G = 1, f = 1kHz		0.0007		%
OUTPUT						
Voltage Output Swing from Rail[3]		R_L = 100kΩ, A_{OL} ≥ 106dB		1	5	mV
T_A = –40°C to +85°C		R_L = 100kΩ, A_{OL} ≥ 106dB			**5**	mV
		R_L = 10kΩ, A_{OL} ≥ 100dB		10	50	mV
T_A = –40°C to +85°C		R_L = 10kΩ, A_{OL} ≥ 100dB			**50**	mV
		R_L = 2kΩ, A_{OL} ≥ 94dB		40	200	mV
T_A = –40°C to +85°C		R_L = 2kΩ, A_{OL} ≥ 94dB			**200**	mV
Short-Circuit Current	I_{SC}			±50		mA
Capacitive Load Drive	C_{LOAD}		See Typical Curve			
POWER SUPPLY						
Specified Voltage Range	V_S		2.7		5	V
Operating Voltage Range				2.5 to 5.5		V
Quiescent Current (per amplifier)	I_Q	I_O = 0, V_S = +5V		750	950	µA
T_A = –40°C to +85°C		I_O = 0, V_S = +5V			**1100**	µA
TEMPERATURE RANGE						
Specified Range			–40		+85	°C
Operating Range			–55		+125	°C
Storage Range			–55		+125	°C
Thermal Resistance	θ_{JA}					
SOT-23-5 Surface Mount				200		°C/W
MSOP-8 Surface Mount				150		°C/W
SO-8 Surface Mount				150		°C/W
8-Pin DIP				100		°C/W
SSOP-16 Surface Mount				100		°C/W
SO-14 Surface Mount				100		°C/W
14-Pin DIP				80		°C/W

NOTES: (1) V_S = +5V. (2) V_{OUT} = 0.25V to 3.25V. (3) Output voltage swings are measured between the output and power supply rails.

PIN CONFIGURATIONS

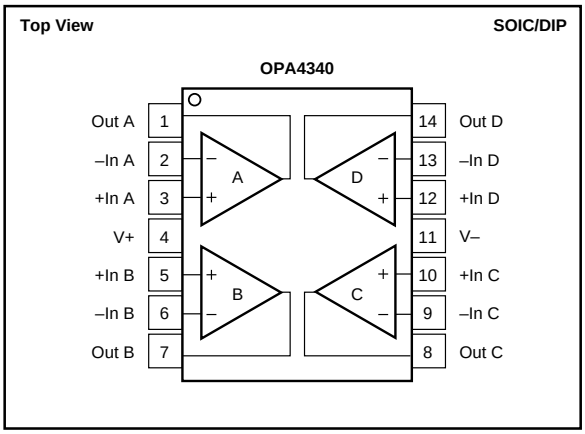

ELECTROSTATIC DISCHARGE SENSITIVITY

This integrated circuit can be damaged by ESD. Burr-Brown recommends that all integrated circuits be handled with appropriate precautions. Failure to observe proper handling and installation procedures can cause damage.

ESD damage can range from subtle performance degradation to complete device failure. Precision integrated circuits may be more susceptible to damage because very small parametric changes could cause the device not to meet its published specifications.

ABSOLUTE MAXIMUM RATINGS[1]

Supply Voltage	5.5V
Signal Input Terminals, Voltage[2]	(V–) –0.5V to (V+) +0.5V
Current[2]	10mA
Output Short-Circuit[3]	Continuous
Operating Temperature	–55°C to +125°C
Storage Temperature	–55°C to +125°C
Junction Temperature	150°C
Lead Temperature (soldering, 10s)	300°C

NOTES: (1) Stresses above these ratings may cause permanent damage. (2) Input terminals are diode-clamped to the power supply rails. Input signals that can swing more than 0.5V beyond the supply rails should be current-limited to 10mA or less. (3) Short-circuit to ground, one amplifier per package.

PACKAGE/ORDERING INFORMATION

PRODUCT	PACKAGE	PACKAGE DRAWING NUMBER[1]	SPECIFIED TEMPERATURE RANGE	PACKAGE MARKING	ORDERING NUMBER[2]	TRANSPORT MEDIA
Single						
OPA340NA	5-Lead SOT-23-5	331	–40°C to +85°C	A40	OPA340NA-250	Tape and Reel
"	"	"	"	"	OPA340NA-3K	Tape and Reel
OPA340PA	8-Pin DIP	006	–40°C to +85°C	OPA340PA	OPA340PA	Rails
OPA340UA	SO-8 Surface-Mount	182	–40°C to +85°C	OPA340UA	OPA340UA	Rails[3]
Dual						
OPA2340EA	MSOP-8 Surface-Mount	337	–40°C to +85°C	A40A	OPA2340EA-250	Tape and Reel
"	"	"	"	"	OPA2340EA-2500	Tape and Reel
OPA2340PA	8-Pin DIP	006	–40°C to +85°C	OPA2340PA	OPA2340PA	Rails
OPA2340UA	SO-8 Surface-Mount	182	–40°C to +85°C	OPA2340UA	OPA2340UA	Rails[3]
Quad						
OPA4340EA	SSOP-16 Surface-Mount	322	–40°C to +85°C	OPA4340EA	OPA4340EA-250	Tape and Reel
"	"	"	"	"	OPA4340EA-2500	Tape and Reel
OPA4340PA	14-Pin DIP	010	–40°C to +85°C	OPA4340PA	OPA4340PA	Rails
OPA4340UA	SO-14 Surface Mount	235	–40°C to +85°C	OPA4340UA	OPA4340UA	Rails[3]

NOTES: (1) For detailed drawing and dimension table, please see end of data sheet, or Appendix C of Burr-Brown IC Data Book. (2) Models with -250, -2500, and -3K are available only in Tape and Reel in the quantities indicated (e.g., -250 indicates 250 devices per reel). Ordering 3000 pieces of "OPA340NA-3K" will get a single 3000 piece Tape and Reel. For detailed Tape and Reel mechanical information, refer to Appendix B of Burr-Brown IC Data Book. (3) SO-8 and SO-14 models also available in Tape and Reel.

The information provided herein is believed to be reliable; however, BURR-BROWN assumes no responsibility for inaccuracies or omissions. BURR-BROWN assumes no responsibility for the use of this information, and all use of such information shall be entirely at the user's own risk. Prices and specifications are subject to change without notice. No patent rights or licenses to any of the circuits described herein are implied or granted to any third party. BURR-BROWN does not authorize or warrant any BURR-BROWN product for use in life support devices and/or systems.

TYPICAL PERFORMANCE CURVES

At T_A = +25°C, V_S = +5V, and R_L = 10kΩ connected to V_S/2, unless otherwise noted.

OPEN-LOOP GAIN/PHASE vs FREQUENCY

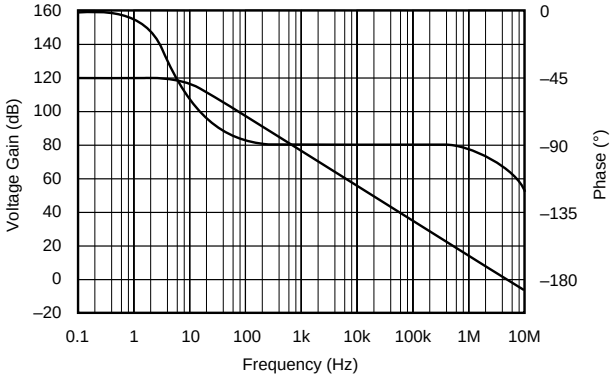

POWER SUPPLY and COMMON-MODE REJECTION vs FREQUENCY

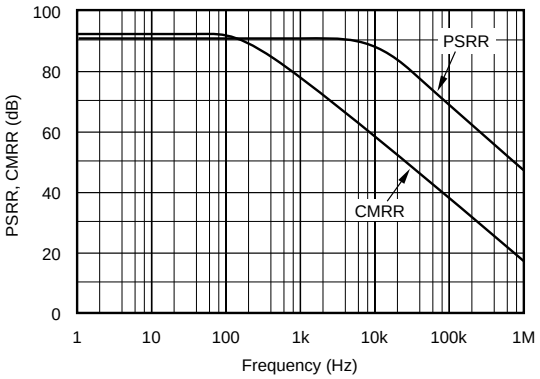

INPUT VOLTAGE AND CURRENT NOISE SPECTRAL DENSITY vs FREQUENCY

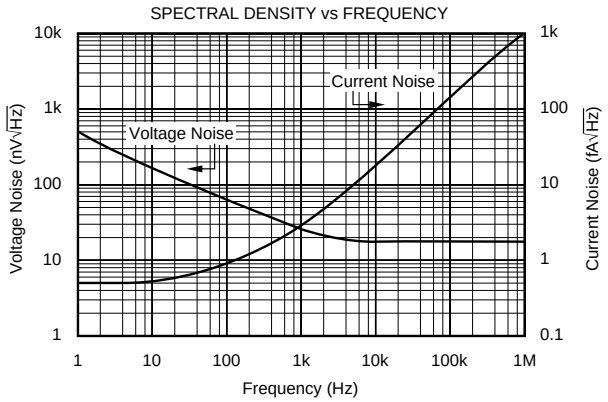

CHANNEL SEPARATION vs FREQUENCY

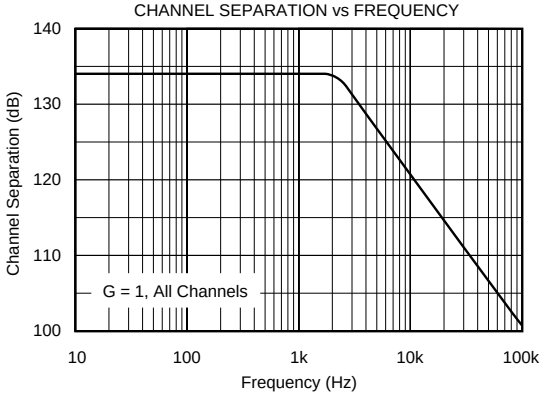

TOTAL HARMONIC DISTORTION + NOISE vs FREQUENCY

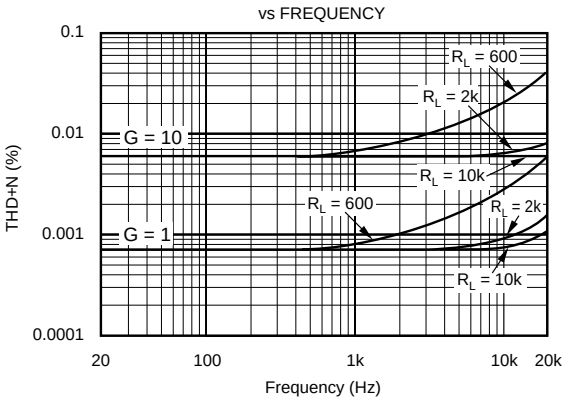

CLOSED-LOOP OUTPUT IMPEDANCE vs FREQUENCY

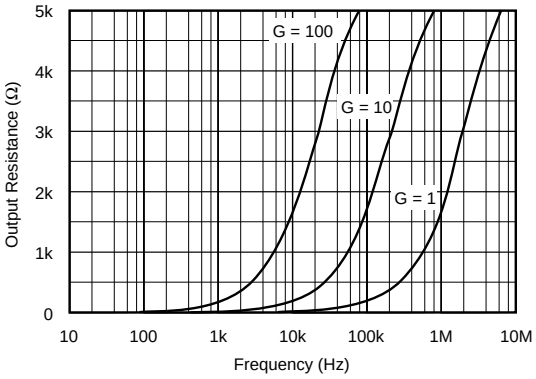

TYPICAL PERFORMANCE CURVES (CONT)

At T_A = +25°C, V_S = +5V, and R_L = 10kΩ connected to V_S/2, unless otherwise noted.

OPEN-LOOP GAIN AND POWER SUPPLY REJECTION vs TEMPERATURE

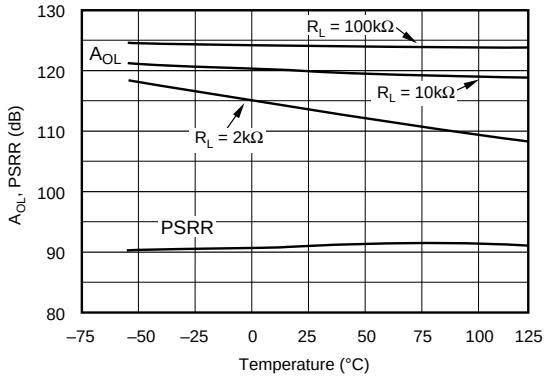

COMMON-MODE REJECTION vs TEMPERATURE

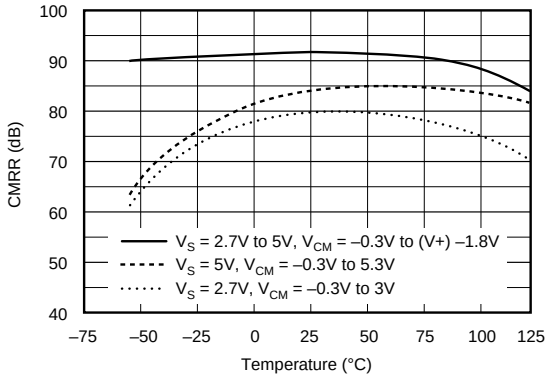

QUIESCENT CURRENT vs TEMPERATURE

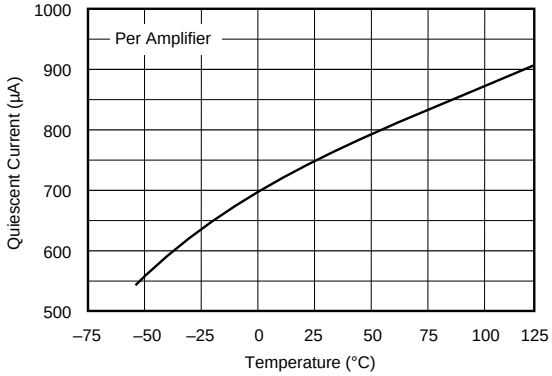

QUIESCENT CURRENT vs SUPPLY VOLTAGE

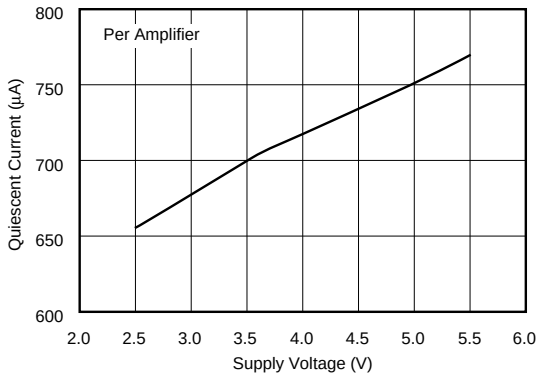

SHORT-CIRCUIT CURRENT vs TEMPERATURE

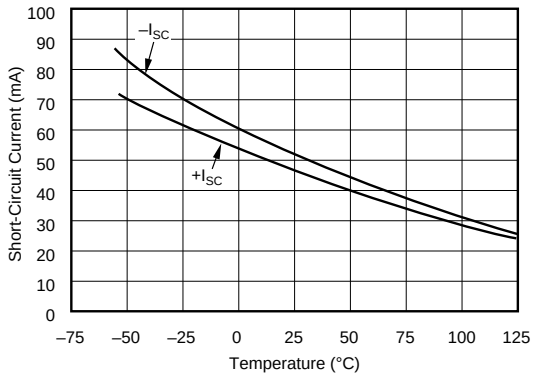

SHORT-CIRCUIT CURRENT vs SUPPLY VOLTAGE

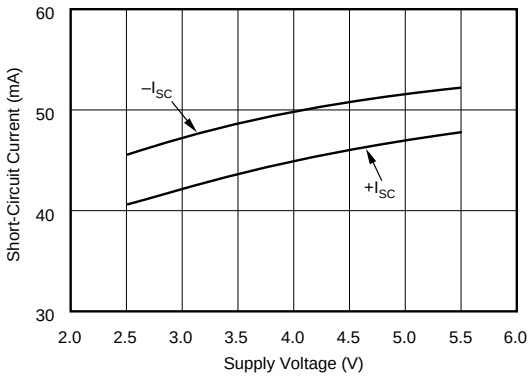

TYPICAL PERFORMANCE CURVES (CONT)

At T_A = +25°C, V_S = +5V, and R_L = 10kΩ connected to V_S/2, unless otherwise noted.

INPUT BIAS CURRENT vs TEMPERATURE

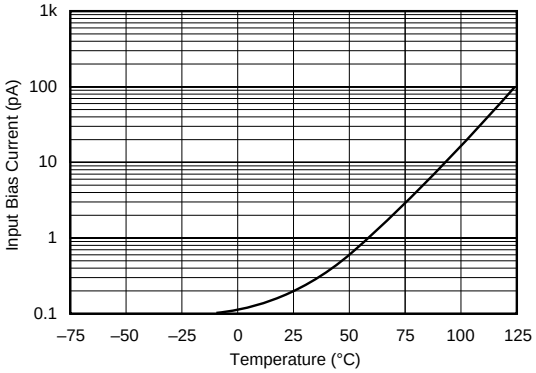

INPUT BIAS CURRENT
vs INPUT COMMON-MODE VOLTAGE

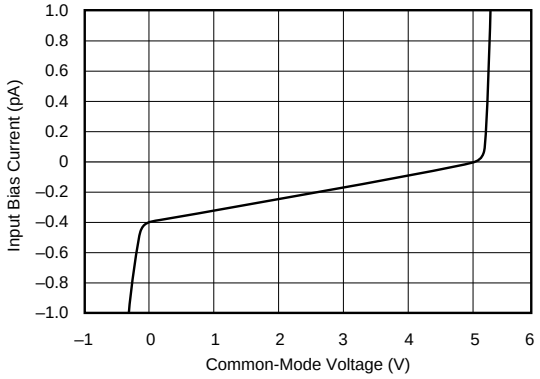

OUTPUT VOLTAGE SWING vs OUTPUT CURRENT

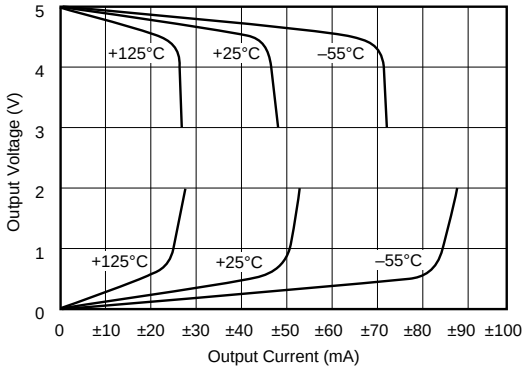

MAXIMUM OUTPUT VOLTAGE vs FREQUENCY

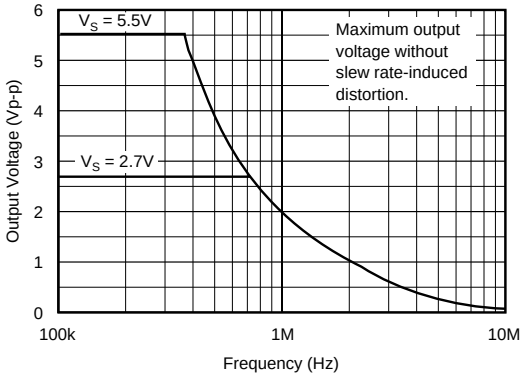

OFFSET VOLTAGE
PRODUCTION DISTRIBUTION

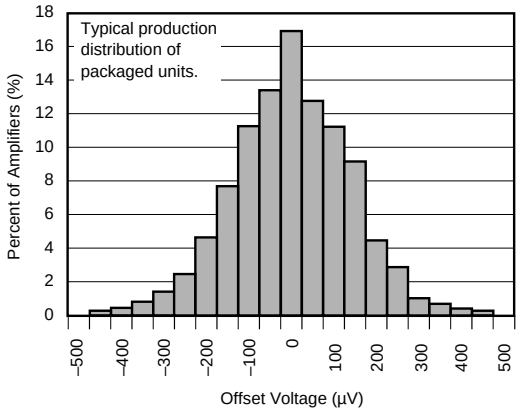

OFFSET VOLTAGE DRIFT MAGNITUDE
PRODUCTION DISTRIBUTION

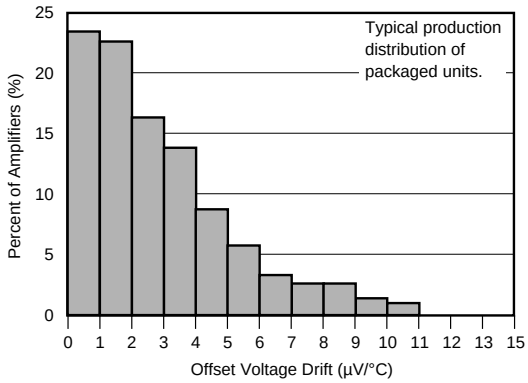

TYPICAL PERFORMANCE CURVES (CONT)

At T_A = +25°C, V_S = +5V, and R_L = 10kΩ connected to V_S/2, unless otherwise noted.

SMALL-SIGNAL STEP RESPONSE
C_L = 100pF

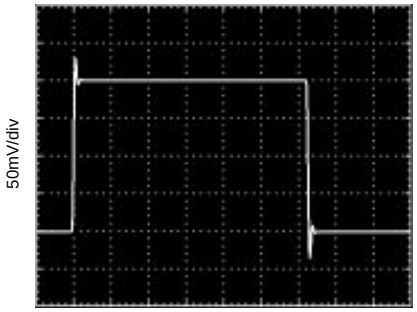

LARGE-SIGNAL STEP RESPONSE
C_L = 100pF

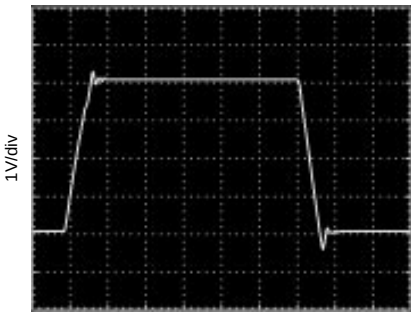

SMALL-SIGNAL OVERSHOOT vs LOAD CAPACITANCE

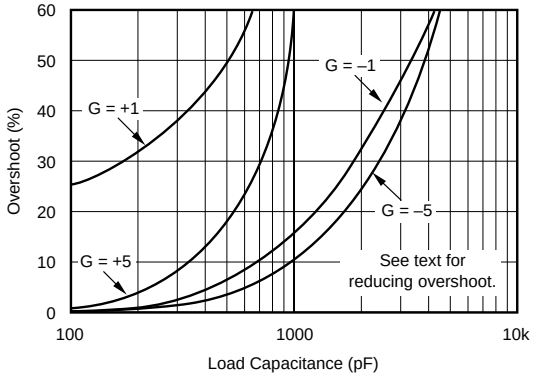

SETTLING TIME vs CLOSED-LOOP GAIN

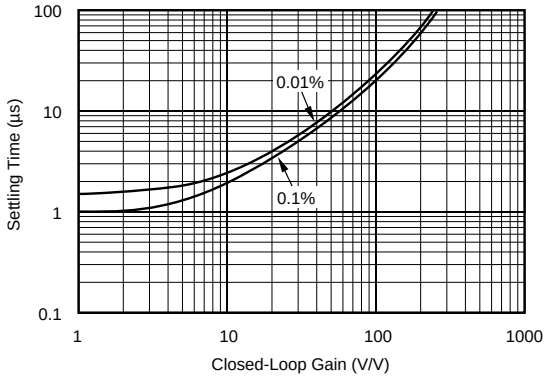

APPLICATIONS INFORMATION

OPA340 series op amps are fabricated on a state-of-the-art 0.6 micron CMOS process. They are unity-gain stable and suitable for a wide range of general purpose applications. Rail-to-rail input/output make them ideal for driving sampling A/D converters. In addition, excellent ac performance makes them well-suited for audio applications. The class AB output stage is capable of driving 600Ω loads connected to any point between V+ and ground.

Rail-to-rail input and output swing significantly increases dynamic range, especially in low supply applications. Figure 1 shows the input and output waveforms for the OPA340 in unity-gain configuration. Operation is from a single +5V supply with a 10kΩ load connected to $V_S/2$. The input is a 5Vp-p sinusoid. Output voltage is approximately 4.98Vp-p.

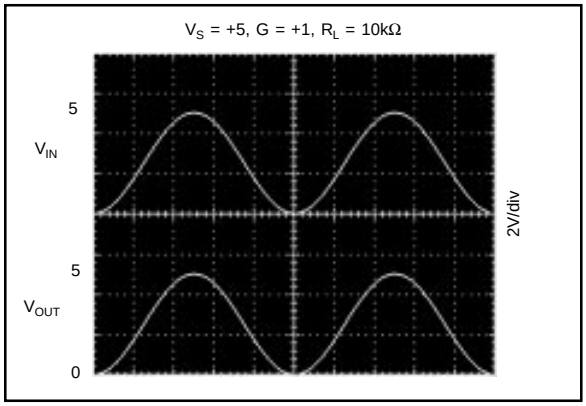

FIGURE 1. Rail-to-Rail Input and Output.

Power supply pins should be bypassed with 0.01µF ceramic capacitors.

OPERATING VOLTAGE

OPA340 series op amps are fully specified from +2.7V to +5V. However, supply voltage may range from +2.5V to +5.5V. Parameters are guaranteed over the specified supply range—a unique feature of the OPA340 series. In addition, many specifications apply from –40°C to +85°C. Most behavior remains virtually unchanged throughout the full operating voltage range. Parameters which vary significantly with operating voltages or temperature are shown in the typical performance curves.

RAIL-TO-RAIL INPUT

The input common-mode voltage range of the OPA340 series extends 500mV beyond the supply rails. This is achieved with a complementary input stage—an N-channel input differential pair in parallel with a P-channel differential pair (see Figure 2). The N-channel pair is active for input voltages close to the positive rail, typically (V+) –1.3V to 500mV above the positive supply, while the P-channel pair is on for inputs from 500mV below the negative supply to approximately (V+) –1.3V. There is a small transition region, typically (V+) –1.5V to (V+) –1.1V, in which both pairs are on. This 400mV transition region can vary ±300mV with process variation. Thus, the transition region (both stages on) can range from (V+) –1.8V to (V+) –1.4V on the low end, up to (V+) –1.2V to (V+) –0.8V on the high end.

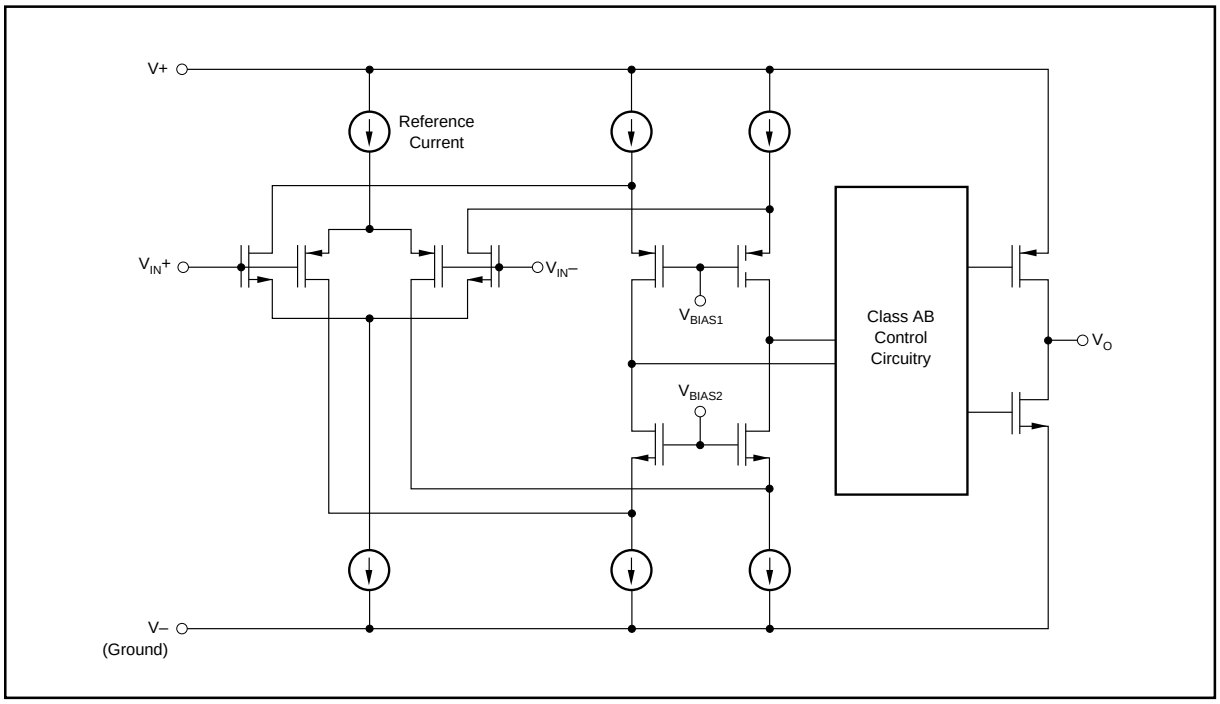

FIGURE 2. Simplified Schematic.

OPA340 series op amps are laser-trimmed to the reduce offset voltage difference between the N-channel and P-channel input stages, resulting in improved common-mode rejection and a smooth transition between the N-channel pair and the P-channel pair. However, within the 400mV transition region PSRR, CMRR, offset voltage, offset drift, and THD may be degraded compared to operation outside this region.

A double-folded cascode adds the signal from the two input pairs and presents a differential signal to the class AB output stage. Normally, input bias current is approximately 200fA, however, input voltages exceeding the power supplies by more than 500mV can cause excessive current to flow in or out of the input pins. Momentary voltages greater than 500mV beyond the power supply can be tolerated if the current on the input pins is limited to 10mA. This is easily accomplished with an input resistor as shown in Figure 3. Many input signals are inherently current-limited to less than 10mA, therefore, a limiting resistor is not required.

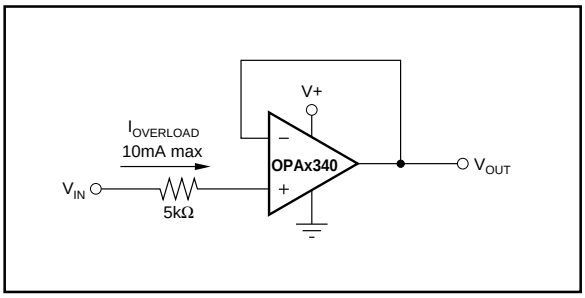

FIGURE 3. Input Current Protection for Voltages Exceeding the Supply Voltage.

RAIL-TO-RAIL OUTPUT

A class AB output stage with common-source transistors is used to achieve rail-to-rail output. For light resistive loads (>50kΩ), the output voltage is typically a few millivolts from the supply rails. With moderate resistive loads (2kΩ to 50kΩ), the output can swing to within a few tens of millivolts from the supply rails and maintain high open-loop gain. See the typical performanc curve "Output Voltage Swing vs Output Current."

CAPACITIVE LOAD AND STABILITY

OPA340 series op amps can drive a wide range of capacitive loads. However, all op amps under certain conditions may become unstable. Op amp configuration, gain, and load value are just a few of the factors to consider when determining stability. An op amp in unity gain configuration is the most susceptible to the effects of capacitive load. The capacitive load reacts with the op amp's output resistance, along with any additional load resistance, to create a pole in the small-signal response which degrades the phase margin. In unity gain, OPA340 series op amps perform well, with a pure capacitive load up to approximately 1000pF. Increasing gain enhances the amplifier's ability to drive more capacitance. See the typical performance curve "Small-Signal Overshoot vs Capacitive Load."

One method of improving capacitive load drive in the unity gain configuration is to insert a 10Ω to 20Ω resistor in series with the output, as shown in Figure 4. This significantly reduces ringing with large capacitive loads. However, if there is a resistive load in parallel with the capacitive load, it creates a voltage divider introducing a dc error at the output and slightly reduces output swing. This error may be insignificant. For instance, with R_L = 10kΩ and R_S = 20Ω, there is only about a 0.2% error at the output.

DRIVING A/D CONVERTERS

OPA340 series op amps are optimized for driving medium speed (up to 100kHz) sampling A/D converters. However, they also offer excellent performance for higher speed converters. The OPA340 series provides an effective means of buffering the A/D's input capacitance and resulting charge injection while providing signal gain.

Figures 5 and 6 show the OPA340 driving an ADS7816. The ADS7816 is a 12-bit, micro-power sampling converter in the tiny MSOP-8 package. When used with the miniature package options of the OPA340 series, the combination is ideal for space-limited and low power applications. For further information consult the ADS7816 data sheet.

With the OPA340 in a noninverting configuration, an RC network at the amplifier's output can be used to filter high frequency noise in the signal (Figure 5). In the inverting configuration, filtering may be accomplished with a capacitor across the feedback resistor (Figure 6).

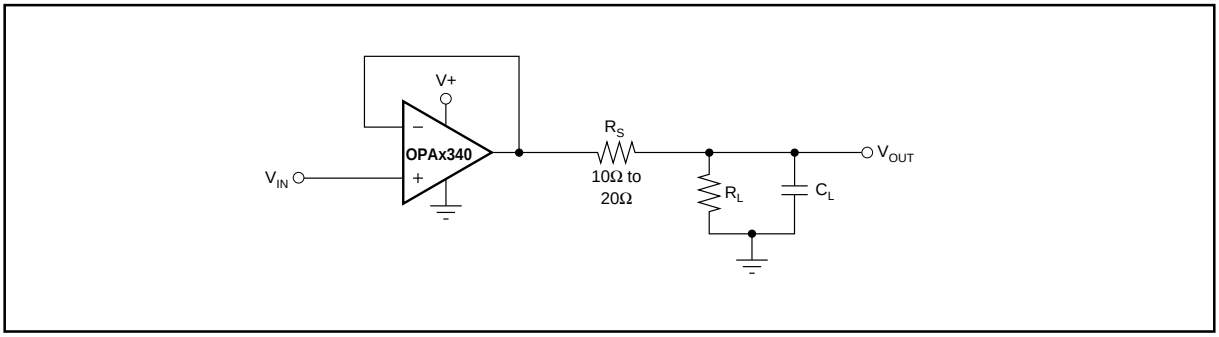

FIGURE 4. Series Resistor in Unity-Gain Configuration Improves Capacitive Load Drive.

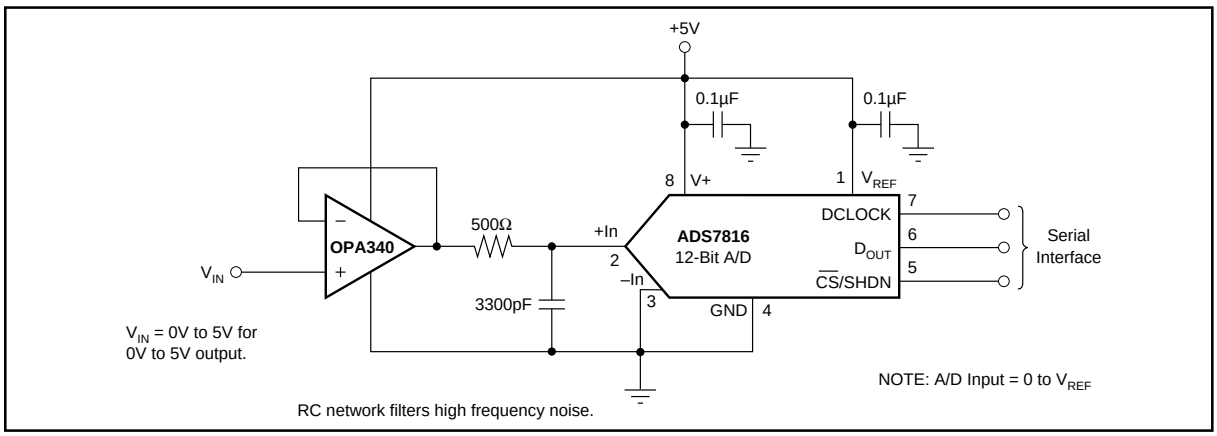

FIGURE 5. OPA340 in Noninverting Configuration Driving ADS7816.

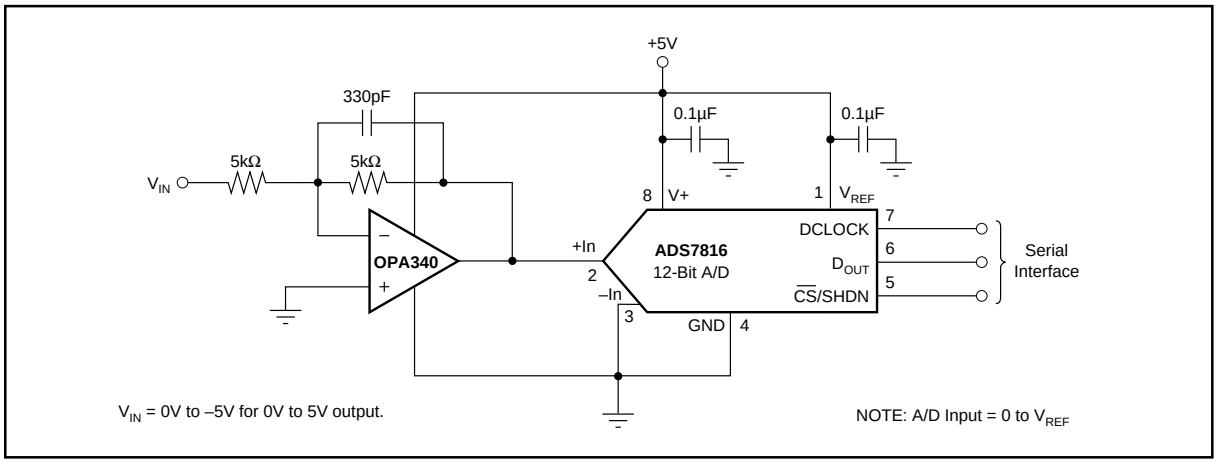

FIGURE 6. OPA340 in Inverting Configuration Driving ADS7816.

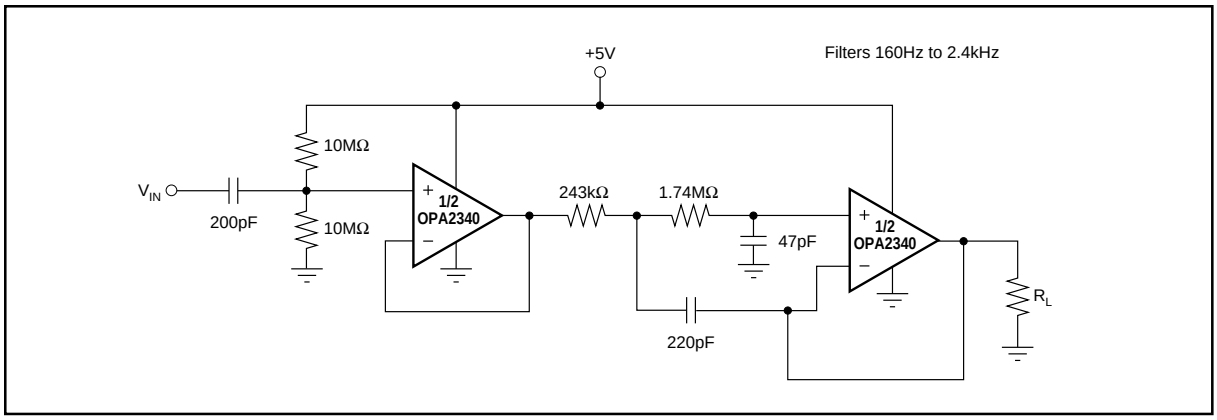

FIGURE 7. Speech Bandpass Filter.

PACKAGING INFORMATION

Orderable Device	Status (1)	Package Type	Package Drawing	Pins	Package Qty	Eco Plan (2)	Lead/Ball Finish	MSL Peak Temp (3)
OPA2340EA/250	ACTIVE	MSOP	DGK	8	250	Green (RoHS & no Sb/Br)	CU NIPDAU	Level-2-260C-1 YEAR
OPA2340EA/250G4	ACTIVE	MSOP	DGK	8	250	Green (RoHS & no Sb/Br)	CU NIPDAU	Level-2-260C-1 YEAR
OPA2340EA/2K5	ACTIVE	MSOP	DGK	8	2500	Green (RoHS & no Sb/Br)	CU NIPDAU	Level-2-260C-1 YEAR
OPA2340EA/2K5G4	ACTIVE	MSOP	DGK	8	2500	Green (RoHS & no Sb/Br)	CU NIPDAU	Level-2-260C-1 YEAR
OPA2340PA	ACTIVE	PDIP	P	8	50	TBD	Call TI	Level-NA-NA-NA
OPA2340UA	ACTIVE	SOIC	D	8	100	Green (RoHS & no Sb/Br)	CU NIPDAU	Level-2-260C-1 YEAR
OPA2340UA/2K5	ACTIVE	SOIC	D	8	2500	Green (RoHS & no Sb/Br)	CU NIPDAU	Level-2-260C-1 YEAR
OPA2340UA/2K5G4	ACTIVE	SOIC	D	8	2500	Green (RoHS & no Sb/Br)	CU NIPDAU	Level-2-260C-1 YEAR
OPA2340UAG4	ACTIVE	SOIC	D	8	100	Green (RoHS & no Sb/Br)	CU NIPDAU	Level-2-260C-1 YEAR
OPA340NA/250	ACTIVE	SOT-23	DBV	5	250	Green (RoHS & no Sb/Br)	CU NIPDAU	Level-2-260C-1 YEAR
OPA340NA/250G4	ACTIVE	SOT-23	DBV	5	250	Green (RoHS & no Sb/Br)	CU NIPDAU	Level-2-260C-1 YEAR
OPA340NA/3K	ACTIVE	SOT-23	DBV	5	3000	Green (RoHS & no Sb/Br)	CU NIPDAU	Level-2-260C-1 YEAR
OPA340NA/3KG4	ACTIVE	SOT-23	DBV	5	3000	Green (RoHS & no Sb/Br)	CU NIPDAU	Level-2-260C-1 YEAR
OPA340PA	ACTIVE	PDIP	P	8	50	Green (RoHS & no Sb/Br)	CU NIPDAU	Level-NC-NC-NC
OPA340UA	ACTIVE	SOIC	D	8	100	Green (RoHS & no Sb/Br)	CU NIPDAU	Level-2-260C-1 YEAR
OPA340UA/2K5	ACTIVE	SOIC	D	8	2500	Green (RoHS & no Sb/Br)	CU NIPDAU	Level-2-260C-1 YEAR
OPA340UA/2K5G4	ACTIVE	SOIC	D	8	2500	Green (RoHS & no Sb/Br)	CU NIPDAU	Level-2-260C-1 YEAR
OPA340UAG4	ACTIVE	SOIC	D	8	100	Green (RoHS & no Sb/Br)	CU NIPDAU	Level-2-260C-1 YEAR
OPA4340EA/250	ACTIVE	SSOP/ QSOP	DBQ	16	250	Green (RoHS & no Sb/Br)	CU NIPDAU	Level-2-260C-1 YEAR
OPA4340EA/250G4	ACTIVE	SSOP/ QSOP	DBQ	16	250	Green (RoHS & no Sb/Br)	CU NIPDAU	Level-2-260C-1 YEAR
OPA4340EA/2K5	ACTIVE	SSOP/ QSOP	DBQ	16	2500	Green (RoHS & no Sb/Br)	CU NIPDAU	Level-2-260C-1 YEAR
OPA4340PA	OBSOLETE	PDIP	N	14		TBD	Call TI	Call TI
OPA4340UA	ACTIVE	SOIC	D	14	58	Green (RoHS & no Sb/Br)	CU NIPDAU	Level-2-260C-1 YEAR
OPA4340UA/2K5	ACTIVE	SOIC	D	14	2500	Green (RoHS & no Sb/Br)	CU NIPDAU	Level-2-260C-1 YEAR
OPA4340UA/2K5G4	ACTIVE	SOIC	D	14	2500	Green (RoHS & no Sb/Br)	CU NIPDAU	Level-2-260C-1 YEAR

(1) The marketing status values are defined as follows:
ACTIVE: Product device recommended for new designs.
LIFEBUY: TI has announced that the device will be discontinued, and a lifetime-buy period is in effect.
NRND: Not recommended for new designs. Device is in production to support existing customers, but TI does not recommend using this part in a new design.
PREVIEW: Device has been announced but is not in production. Samples may or may not be available.
OBSOLETE: TI has discontinued the production of the device.

(2) Eco Plan - The planned eco-friendly classification: Pb-Free (RoHS) or Green (RoHS & no Sb/Br) - please check http://www.ti.com/productcontent for the latest availability information and additional product content details.
TBD: The Pb-Free/Green conversion plan has not been defined.
Pb-Free (RoHS): TI's terms "Lead-Free" or "Pb-Free" mean semiconductor products that are compatible with the current RoHS requirements for all 6 substances, including the requirement that lead not exceed 0.1% by weight in homogeneous materials. Where designed to be soldered at high temperatures, TI Pb-Free products are suitable for use in specified lead-free processes.
Green (RoHS & no Sb/Br): TI defines "Green" to mean Pb-Free (RoHS compatible), and free of Bromine (Br) and Antimony (Sb) based flame retardants (Br or Sb do not exceed 0.1% by weight in homogeneous material)

(3) MSL, Peak Temp. -- The Moisture Sensitivity Level rating according to the JEDEC industry standard classifications, and peak solder temperature.

Important Information and Disclaimer: The information provided on this page represents TI's knowledge and belief as of the date that it is provided. TI bases its knowledge and belief on information provided by third parties, and makes no representation or warranty as to the accuracy of such information. Efforts are underway to better integrate information from third parties. TI has taken and continues to take reasonable steps to provide representative and accurate information but may not have conducted destructive testing or chemical analysis on incoming materials and chemicals. TI and TI suppliers consider certain information to be proprietary, and thus CAS numbers and other limited information may not be available for release.

In no event shall TI's liability arising out of such information exceed the total purchase price of the TI part(s) at issue in this document sold by TI to Customer on an annual basis.

P (R-PDIP-T8) **PLASTIC DUAL-IN-LINE**

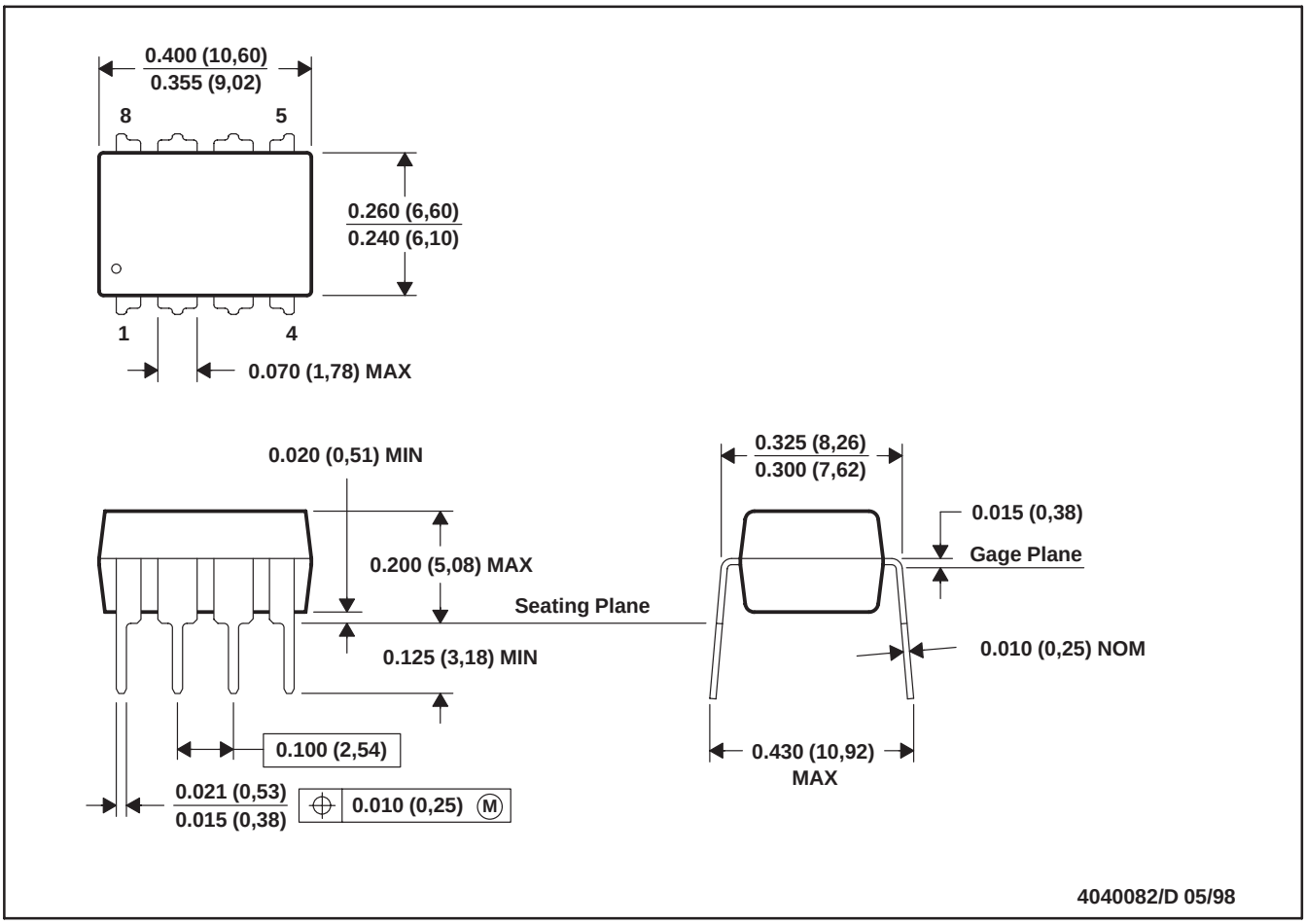

NOTES: A. All linear dimensions are in inches (millimeters).
B. This drawing is subject to change without notice.
C. Falls within JEDEC MS-001

N (R–PDIP–T**) PLASTIC DUAL–IN–LINE PACKAGE

16 PINS SHOWN

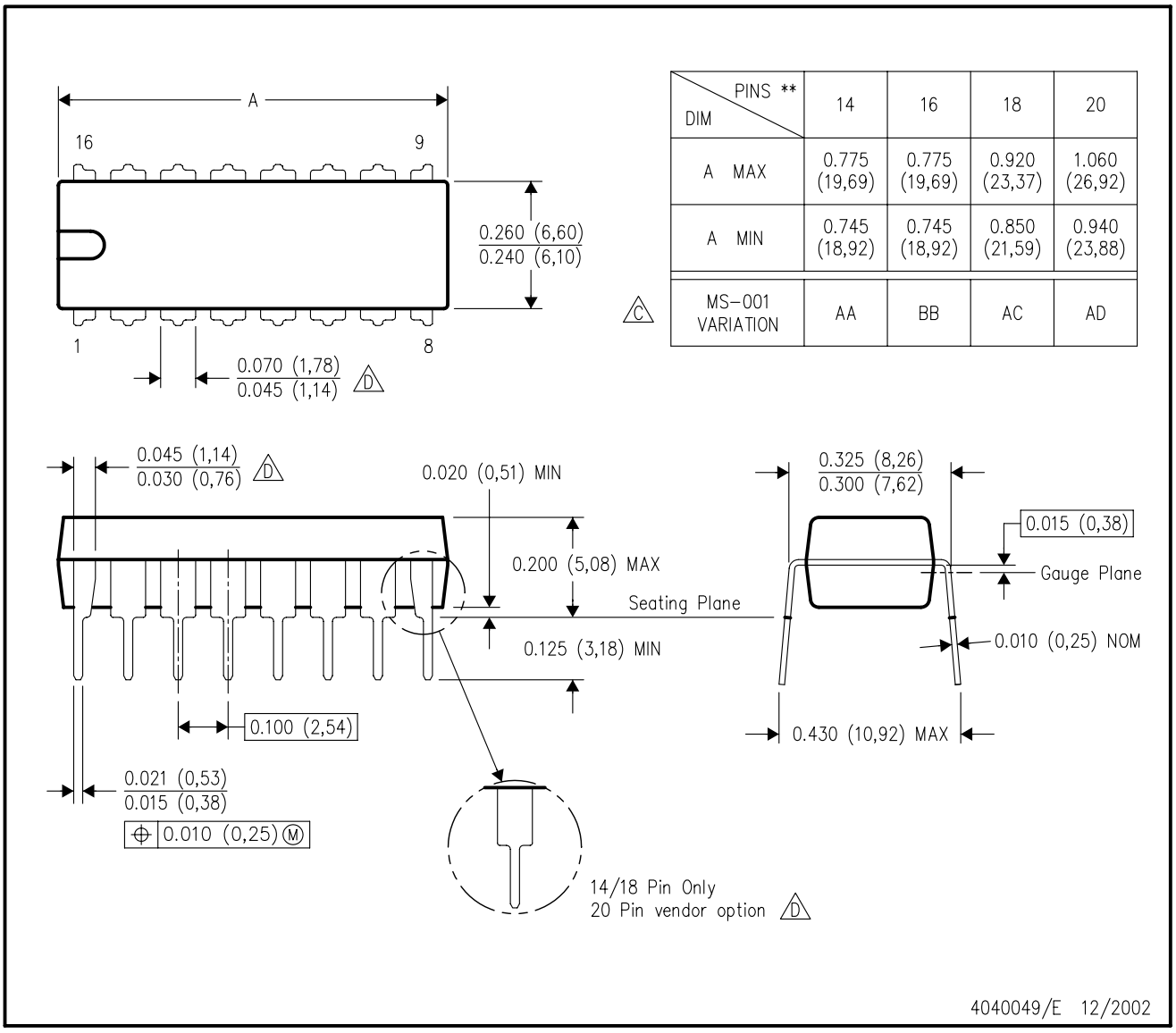

DIM \ PINS **	14	16	18	20
A MAX	0.775 (19,69)	0.775 (19,69)	0.920 (23,37)	1.060 (26,92)
A MIN	0.745 (18,92)	0.745 (18,92)	0.850 (21,59)	0.940 (23,88)
MS–001 VARIATION (C)	AA	BB	AC	AD

NOTES:
A. All linear dimensions are in inches (millimeters).
B. This drawing is subject to change without notice.
C. Falls within JEDEC MS–001, except 18 and 20 pin minimum body length (Dim A).
D. The 20 pin end lead shoulder width is a vendor option, either half or full width.

DBV (R–PDSO–G5) PLASTIC SMALL–OUTLINE PACKAGE

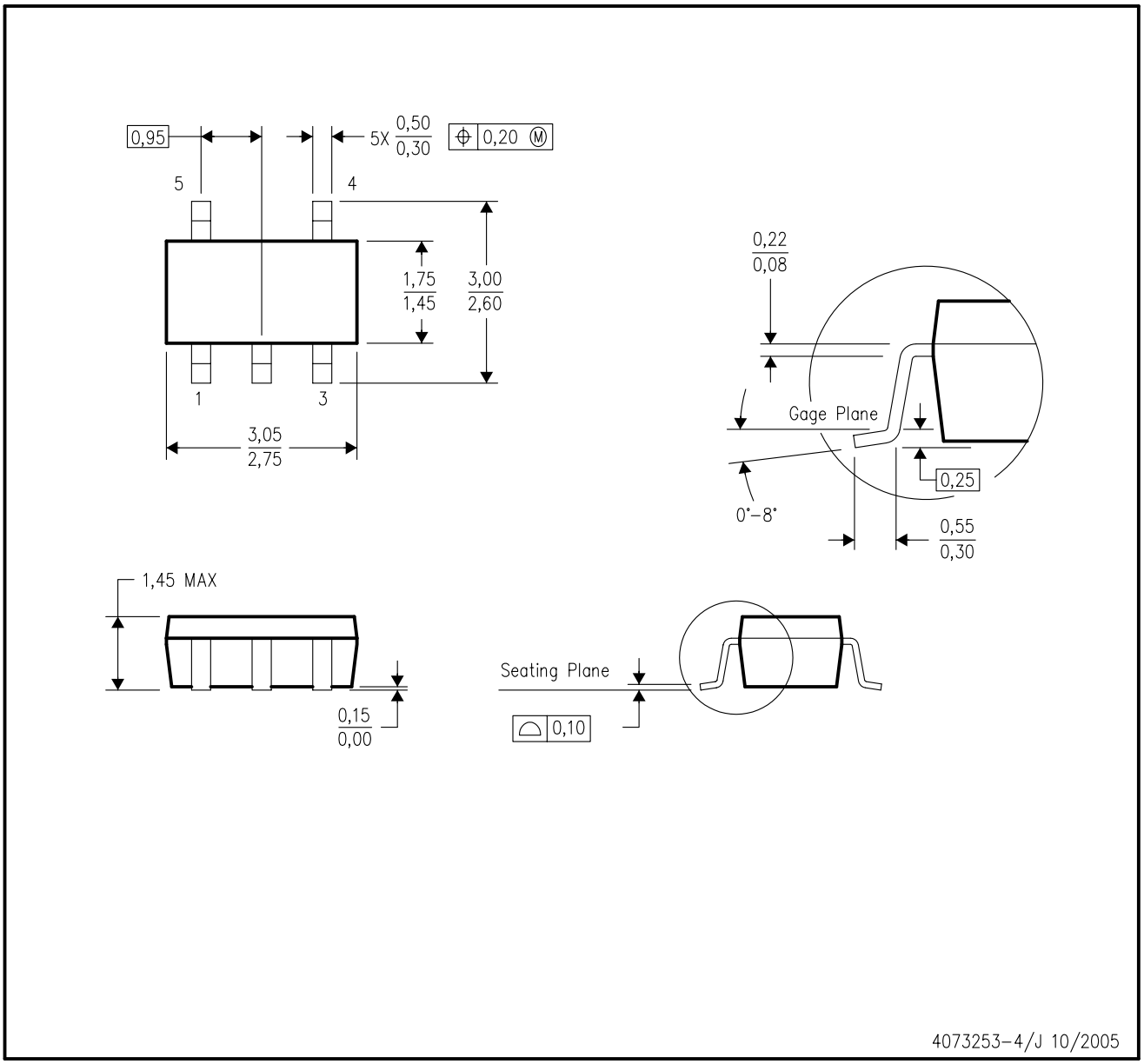

NOTES:
A. All linear dimensions are in millimeters.
B. This drawing is subject to change without notice.
C. Body dimensions do not include mold flash or protrusion. Mold flash and protrusion shall not exceed 0.15 per side.
D. Falls within JEDEC MO–178 Variation AA.

DGK (S–PDSO–G8) PLASTIC SMALL–OUTLINE PACKAGE

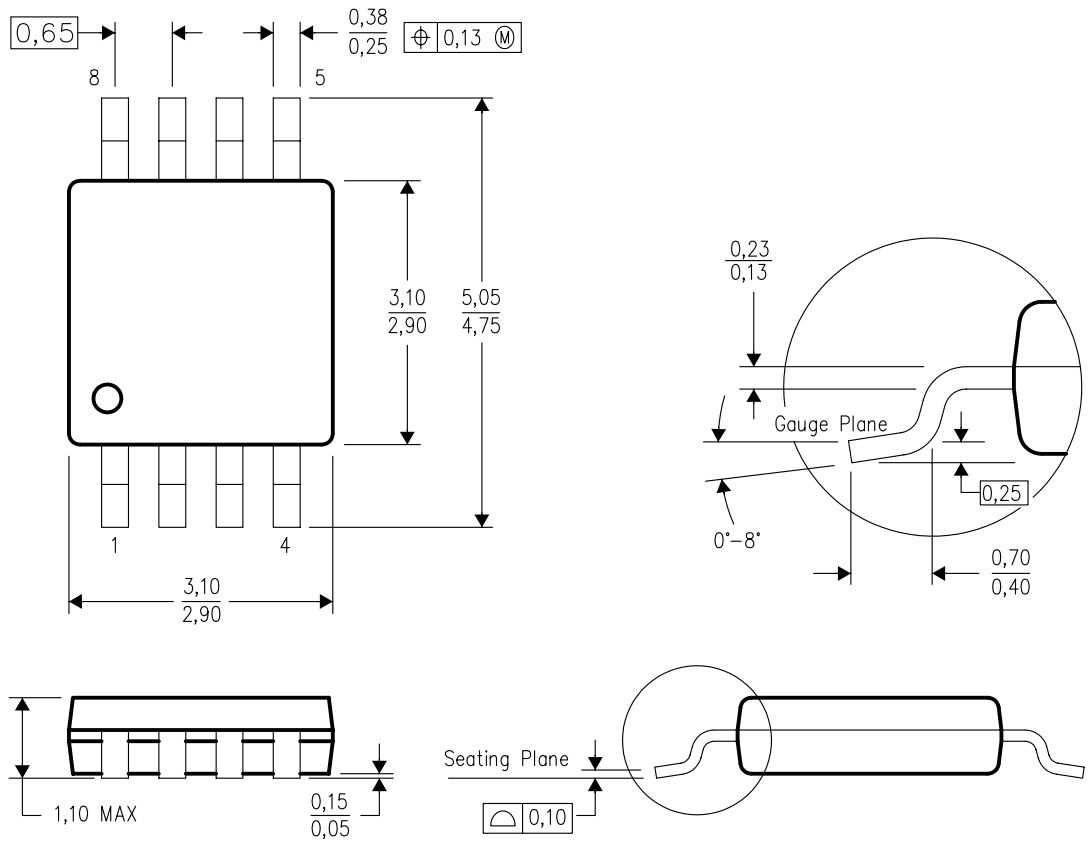

4073329/D 12/03

NOTES:
A. All linear dimensions are in millimeters.
B. This drawing is subject to change without notice.
C. Body dimensions do not include mold flash or protrusion.
D. Falls within JEDEC MO–187 variation AA.

D (R–PDSO–G14) PLASTIC SMALL–OUTLINE PACKAGE

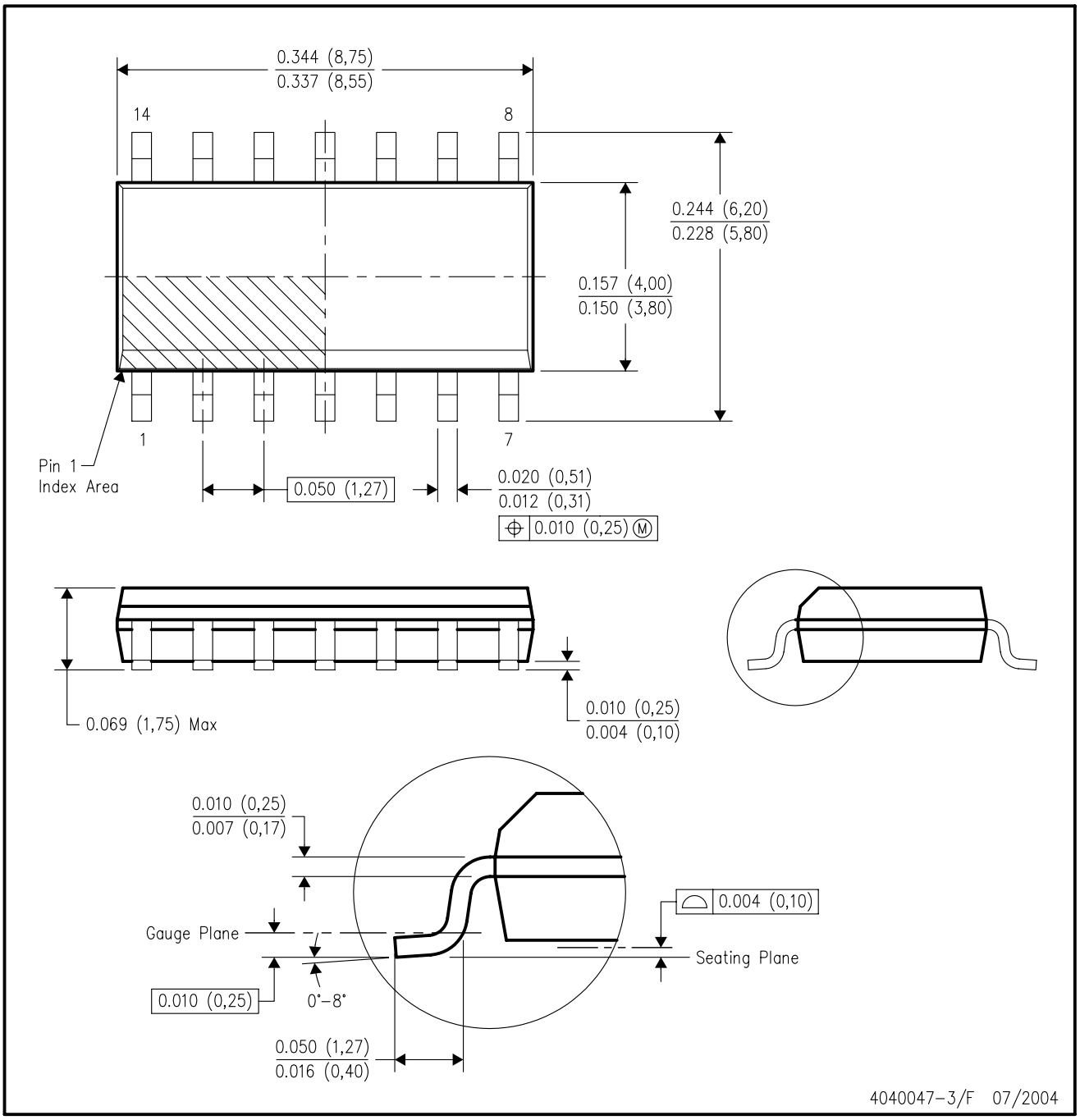

NOTES:
A. All linear dimensions are in inches (millimeters).
B. This drawing is subject to change without notice.
C. Body dimensions do not include mold flash or protrusion not to exceed 0.006 (0,15).
D. Falls within JEDEC MS–012 variation AB.

D (R–PDSO–G8) PLASTIC SMALL–OUTLINE PACKAGE

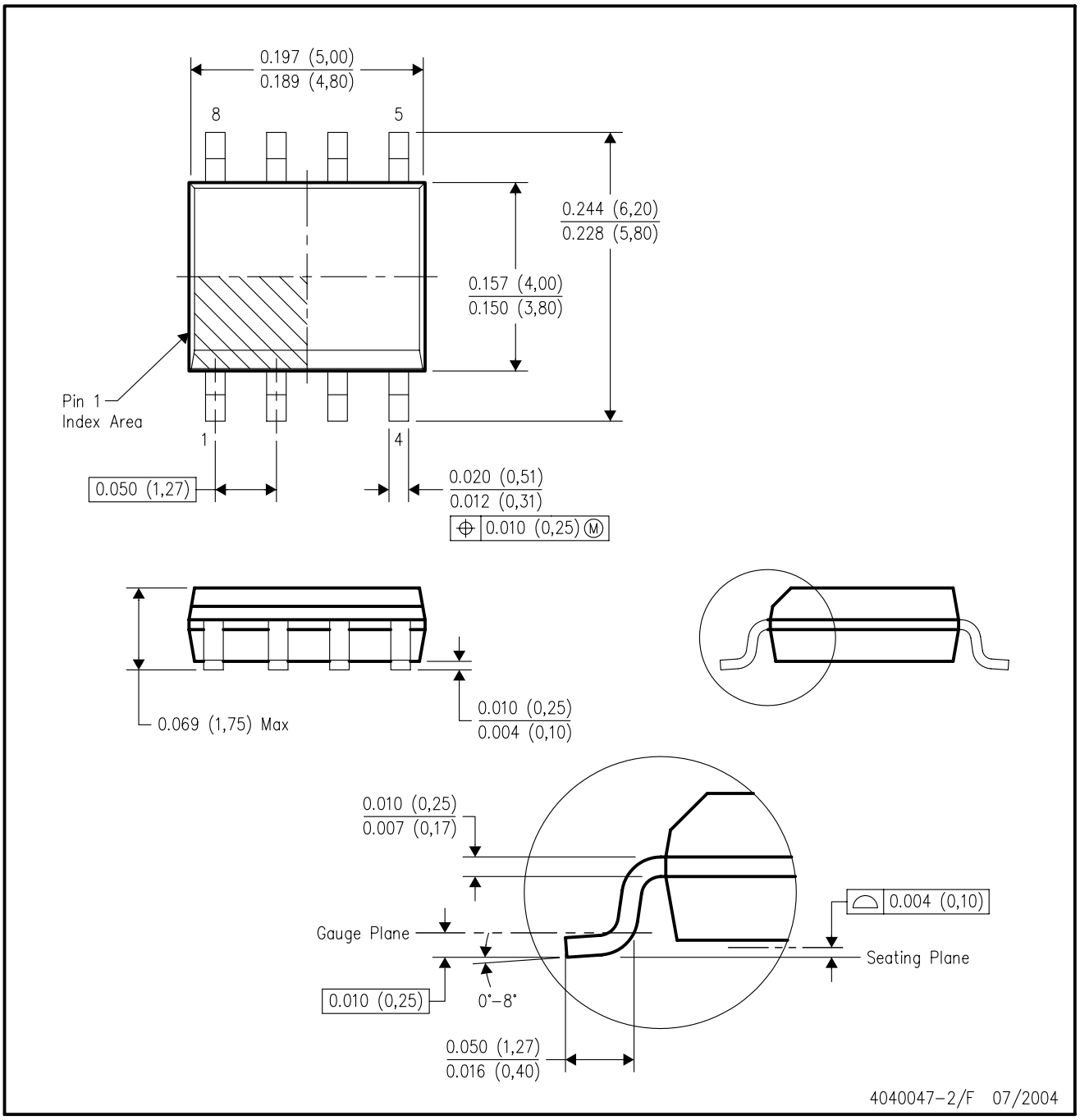

NOTES:
A. All linear dimensions are in inches (millimeters).
B. This drawing is subject to change without notice.
C. Body dimensions do not include mold flash or protrusion not to exceed 0.006 (0,15).
D. Falls within JEDEC MS–012 variation AA.

DBQ (R–PDSO–G16) PLASTIC SMALL–OUTLINE PACKAGE

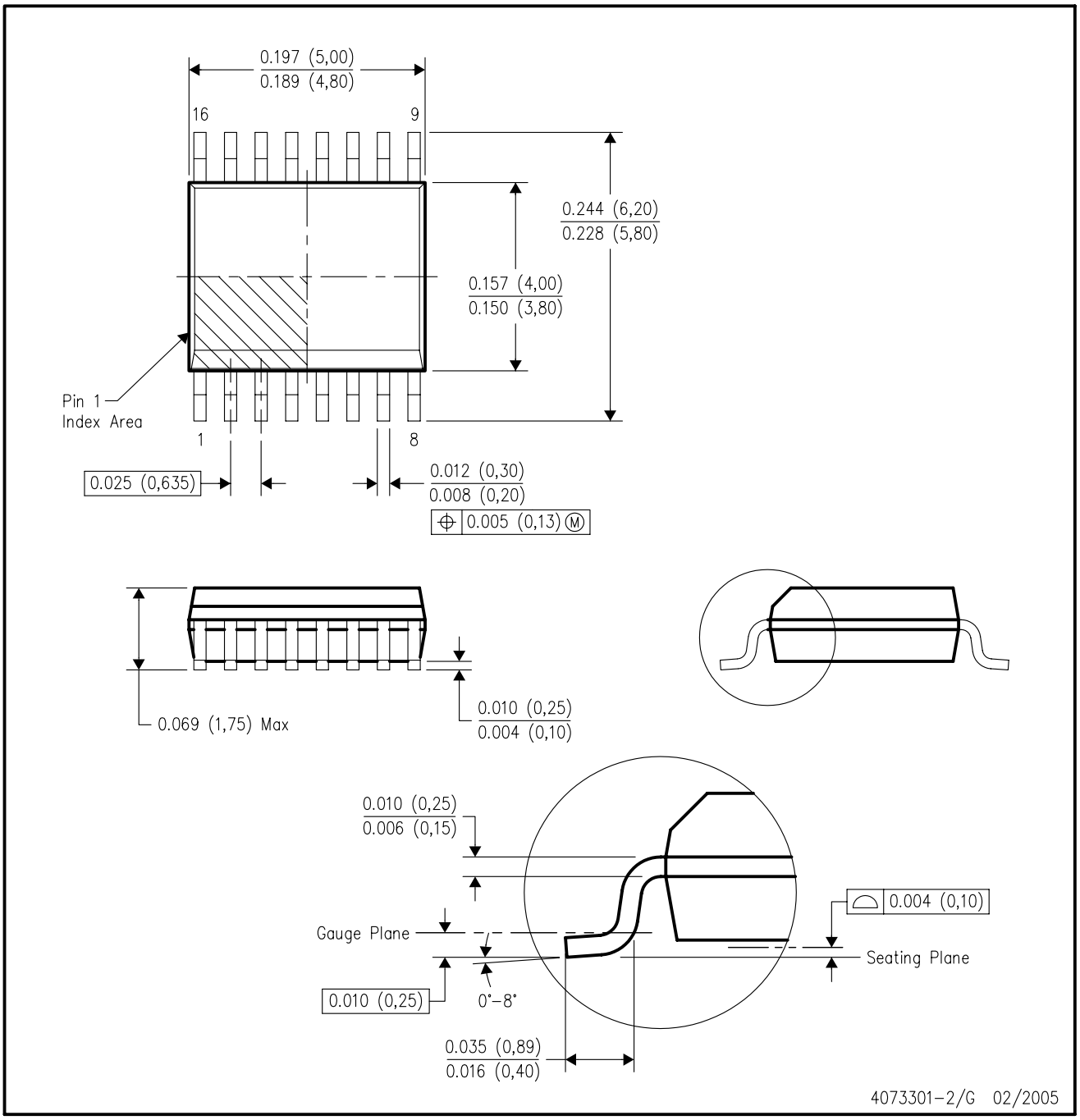

NOTES:
A. All linear dimensions are in inches (millimeters).
B. This drawing is subject to change without notice.
C. Body dimensions do not include mold flash or protrusion not to exceed 0.006 (0,15) per side.
D. Falls within JEDEC MO–137 variation AB.

IMPORTANT NOTICE

Texas Instruments Incorporated and its subsidiaries (TI) reserve the right to make corrections, modifications, enhancements, improvements, and other changes to its products and services at any time and to discontinue any product or service without notice. Customers should obtain the latest relevant information before placing orders and should verify that such information is current and complete. All products are sold subject to TI's terms and conditions of sale supplied at the time of order acknowledgment.

TI warrants performance of its hardware products to the specifications applicable at the time of sale in accordance with TI's standard warranty. Testing and other quality control techniques are used to the extent TI deems necessary to support this warranty. Except where mandated by government requirements, testing of all parameters of each product is not necessarily performed.

TI assumes no liability for applications assistance or customer product design. Customers are responsible for their products and applications using TI components. To minimize the risks associated with customer products and applications, customers should provide adequate design and operating safeguards.

TI does not warrant or represent that any license, either express or implied, is granted under any TI patent right, copyright, mask work right, or other TI intellectual property right relating to any combination, machine, or process in which TI products or services are used. Information published by TI regarding third-party products or services does not constitute a license from TI to use such products or services or a warranty or endorsement thereof. Use of such information may require a license from a third party under the patents or other intellectual property of the third party, or a license from TI under the patents or other intellectual property of TI.

Reproduction of information in TI data books or data sheets is permissible only if reproduction is without alteration and is accompanied by all associated warranties, conditions, limitations, and notices. Reproduction of this information with alteration is an unfair and deceptive business practice. TI is not responsible or liable for such altered documentation.

Resale of TI products or services with statements different from or beyond the parameters stated by TI for that product or service voids all express and any implied warranties for the associated TI product or service and is an unfair and deceptive business practice. TI is not responsible or liable for any such statements.

Following are URLs where you can obtain information on other Texas Instruments products and application solutions:

Products		**Applications**	
Amplifiers	amplifier.ti.com	Audio	www.ti.com/audio
Data Converters	dataconverter.ti.com	Automotive	www.ti.com/automotive
DSP	dsp.ti.com	Broadband	www.ti.com/broadband
Interface	interface.ti.com	Digital Control	www.ti.com/digitalcontrol
Logic	logic.ti.com	Military	www.ti.com/military
Power Mgmt	power.ti.com	Optical Networking	www.ti.com/opticalnetwork
Microcontrollers	microcontroller.ti.com	Security	www.ti.com/security
		Telephony	www.ti.com/telephony
		Video & Imaging	www.ti.com/video
		Wireless	www.ti.com/wireless

Mailing Address: Texas Instruments
Post Office Box 655303 Dallas, Texas 75265

Copyright © 2005, Texas Instruments Incorporated