LM2840/LM2841/LM2842/ LM2840Q/LM2841Q/LM2842Q 100/300/600 mA 42V Input Step-Down DC/DC Regulator in Thin SOT-23

Check for Samples: LM2841, LM2842

FEATURES

- **LM2840Q, LM2841Q and LM2842Q are Automotive Grade products that are AEC-Q100 grade 1 qualified (-40°C to +125°C operating junction temperature)**
- **Input voltage range of 4.5V to 42V**
- **Output current options of 100 mA, 300 mA and 600 mA**
- **Feedback pin voltage of 0.765V**
- **550 kHz (X) or 1.25 MHz (Y) switching frequency**
- **Low shutdown I_Q, 16 µA typical**
- **Short circuit protected**
- **Internally compensated**
- **Soft-start circuitry**
- **Small overall solution size (TSOT-6L package)**

APPLICATIONS

- **Battery powered equipment**
- **Industrial distributed power applications**
- **Portable media players**
- **Portable hand held instruments**

DESCRIPTION

The LM2840, LM2841 and LM2842 are PWM DC/DC buck (step-down) regulators. With a wide input range from 4.5V-42V, they are suitable for a wide range of applications such as power conditioning from unregulated sources. They feature a low R_{DSON} (0.9Ω typical) internal switch for maximum efficiency (85% typical). Operating frequency is fixed at 550 kHz (X version) and 1.25 MHz (Y version) allowing the use of small external components while still being able to have low output voltage ripple. Soft-start can be implemented using the shutdown pin with an external RC circuit allowing the user to tailor the soft-start time to a specific application.

The LM2840 is optimized for up to 100 mA, the LM2841 for 300 mA and the LM2842 is optimized for up to 600 mA load currents. They all have a 0.765V nominal feedback voltage.

Additional features include: thermal shutdown, V_{IN} under-voltage lockout, and gate drive under-voltage lockout. The LM2840, LM2841 and LM2842 are available in a low profile TSOT-6L package.

Typical Application Circuit

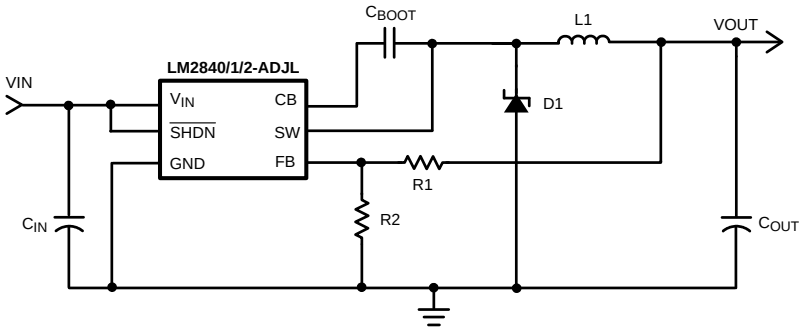

Please be aware that an important notice concerning availability, standard warranty, and use in critical applications of Texas Instruments semiconductor products and disclaimers thereto appears at the end of this data sheet.

All trademarks are the property of their respective owners.

PRODUCTION DATA information is current as of publication date. Products conform to specifications per the terms of the Texas Instruments standard warranty. Production processing does not necessarily include testing of all parameters.

Copyright © 2009–2012, Texas Instruments Incorporated

Connection Diagram

Top View

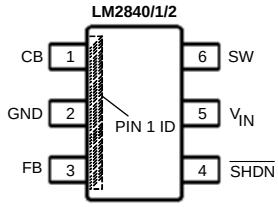

Figure 1. TSOT 6 Lead

Pin Functions

Pin Descriptions

Pin	Name	Function
1	CB	SW FET gate bias voltage. Connect C_{BOOT} cap between CB and SW.
2	GND	Ground connection.
3	FB	Feedback pin: Set feedback voltage divider ratio with $V_{OUT} = V_{FB}$ (1+(R1/R2)). Resistors should be in the 100-10K range to avoid input bias errors.
4	$\overline{SHDN}$	Logic level shutdown input. Pull to GND to disable the device and pull high to enable the device. If this function is not used tie to V_{IN} or leave open.
5	V_{IN}	Power input voltage pin: 4.5V to 42V normal operating range.
6	SW	Power FET output: Connect to inductor, diode, and C_{BOOT} cap.

These devices have limited built-in ESD protection. The leads should be shorted together or the device placed in conductive foam during storage or handling to prevent electrostatic damage to the MOS gates.

Absolute Maximum Ratings (1)

V_{IN}	-0.3V to +45V
$\overline{SHDN}$	-0.3V to (V_{IN}+0.3V) <45V
SW Voltage	-0.3V to +45V
CB Voltage above SW Voltage	7V
FB Voltage	-0.3V to +5V
Maximum Junction Temperature	150°C
Power Dissipation (2)	Internally Limited
Lead Temperature	300°C
Vapor Phase (60 sec.)	215°C
Infrared (15 sec.)	220°C
ESD Susceptibility (3)	
Human Body Model	2 kV

(1) Absolute maximum ratings are limits beyond which damage to the device may occur. Operating Ratings are conditions for which the device is intended to be functional, but device parameter specifications may not be guaranteed. For guaranteed specifications and test conditions, see the Electrical Characteristics.

(2) The maximum allowable power dissipation is a function of the maximum junction temperature, T_J(MAX), the junction-to-ambient thermal resistance, θ_{JA}, and the ambient temperature, T_A. The maximum allowable power dissipation at any ambient temperature is calculated using: P_D (MAX) = ($T_{J(MAX)} - T_A$)/θ_{JA}. Exceeding the maximum allowable power dissipation will cause excessive die temperature, and the regulator will go into thermal shutdown. Internal thermal shutdown circuitry protects the device from permanent damage. Thermal shutdown engages at T_J=175°C (typ.) and disengages at T_J= 155°C (typ).

(3) Human Body Model, applicable std. JESD22-A114-C.

Copyright © 2009–2012, Texas Instruments Incorporated

Operating Conditions

Operating Junction Temperature Range (1)	−40°C to +125°C
Storage Temperature	−65°C to +150°C
Input Voltage V_{IN}	4.5V to 42V
SW Voltage	Up to 42V

(1) All limits guaranteed at room temperature (standard typeface) and at temperature extremes (bold typeface). All room temperature limits are 100% production tested. All limits at temperature extremes are guaranteed via correlation using standard Statistical Quality Control (SQC) methods. All limits are used to calculate Average Outgoing Quality Level (AOQL).

Copyright © 2009–2012, Texas Instruments Incorporated

Electrical Characteristics

Specifications in standard type face are for T_J = 25°C and those with **boldface type** apply over the full **Operating Temperature Range** (T_J = −40°C to +125°C). Minimum and Maximum limits are guaranteed through test, design, or statistical correlation. Typical values represent the most likely parametric norm at T_J = +25°C, and are provided for reference purposes only. Unless otherwise stated the following conditions apply: V_{IN} = 12V.

Symbol	Parameter	Conditions	Min (1)	Typ (2)	Max (1)	Units
I_Q	Quiescent current	$\overline{SHDN}$ = 0V		16	**40**	µA
		Device On, Not Switching		1.30	**1.75**	mA
		Device On, No Load		1.35	**1.85**	
R_{DSON}	Switch ON resistance	(3)		0.9	**1.6**	Ω
I_{LSW}	Switch leakage current	V_{IN} = 42V		0.0	**0.5**	µA
I_{CL}	Switch current limit	LM2840 (4)		525	**900**	mA
		LM2841 (4)		525	**900**	mA
		LM2842 (4)		1.15	**1.7**	A
I_{FB}	Feedback pin bias current	LM2840/41/42 (5)		0.1	**1.0**	µA
V_{FB}	FB Pin reference voltage		**0.747**	0.765	**0.782**	V
$t_{ON(min)}$	Minimum ON time	(6)		100	**150**	ns
$t_{OFF(min)}$	Minimum OFF time	X option		110	**370**	ns
		Y option		104	**200**	ns
f_{SW}	Switching frequency	LM2840/41/42X, V_{FB} = 0.5V	**325**	550	**750**	kHz
		LM2840/41/42X, V_{FB} = 0V		140		
		LM2840/41/42Y, V_{FB} = 0.5V	**0.95**	1.25	**1.50**	MHz
		LM2840/41/42Y, V_{FB} = 0V		0.35		
D_{MAX}	Maximum duty cycle	LM2840/41/42X	**88**	94		%
		LM2840/41/42Y	**81**	87		
V_{UVP}	Undervoltage lockout thresholds	On threshold	**4.4**	3.7		V
		Off threshold		3.5	**3.25**	
$V_{\overline{SHDN}}$	Shutdown threshold	Device on	**2.3**	1.0		V
		Device off		0.9	**0.3**	
$I_{\overline{SHDN}}$	Shutdown pin input bias current	$V_{\overline{SHDN}}$ = 2.3V (5)		0.05	**1.5**	µA
		$V_{\overline{SHDN}}$ = 0V		0.02	**1.5**	
THERMAL SPECIFICATIONS						
$R_{\theta JA}$	Junction-to-Ambient Thermal Resistance, TSOT-6L Package	(7)		121		°C/W
$R_{\theta JC}$	Junction-to-Case Thermal Resistance, TSOT-6L Package			94		°C/W

(1) All limits guaranteed at room temperature (standard typeface) and at temperature extremes (bold typeface). All room temperature limits are 100% production tested. All limits at temperature extremes are guaranteed via correlation using standard Statistical Quality Control (SQC) methods. All limits are used to calculate Average Outgoing Quality Level (AOQL).
(2) Typical numbers are at 25°C and represent the most likely norm.
(3) Includes the bond wires, R_{DSON} from V_{IN} pin to SW pin.
(4) Current limit at 0% duty cycle. May be lower at higher duty cycle or input voltages below 6V.
(5) Bias currents flow into pin.
(6) Minimum On Time guaranteed by design and simulation.
(7) All numbers apply for packages soldered directly onto a 3" x 3" PC board with 2 oz. copper on 4 layers in still air in accordance to JEDEC standards. Thermal resistance varies greatly with layout, copper thickness, number of layers in PCB, power distribution, number of thermal vias, board size, ambient temperature, and air flow.

Copyright © 2009–2012, Texas Instruments Incorporated

Typical Performance Characteristics

Efficiency vs. Load Current (LM2842X, V_{OUT} = 3.3V)

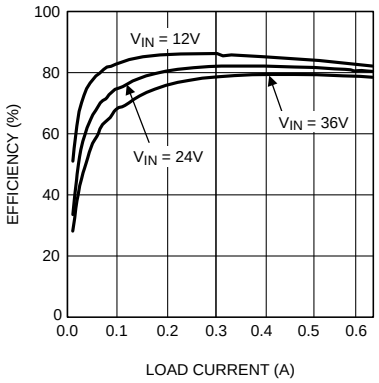

Efficiency vs. Load Current (LM2841X, V_{OUT} = 3.3V)

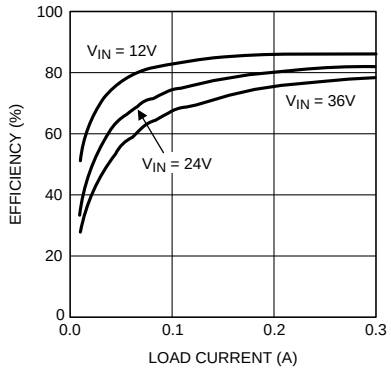

Efficiency vs. Load Current (LM2840X, V_{OUT} = 8V)

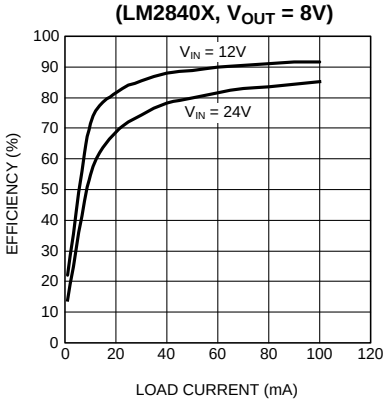

Switching Frequency vs. Temperature (X version)

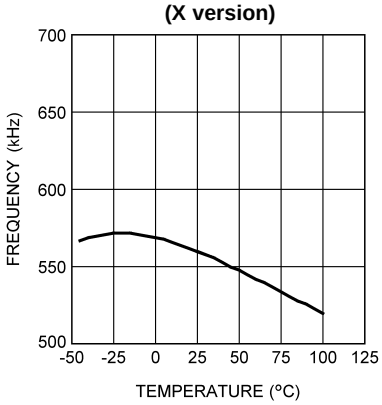

Input UVLO Voltage vs. Temperature

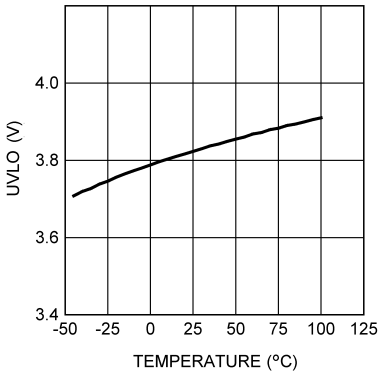

Switch Current Limit vs. $\overline{SHDN}$ Pin Voltage (Soft-start Implementation, LM2840/41)

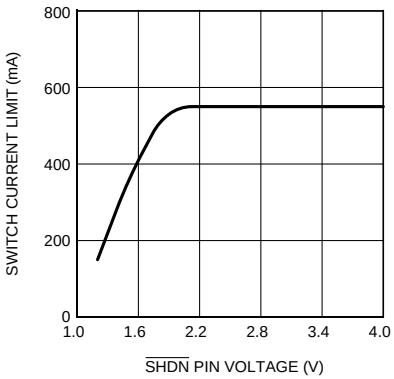

Typical Performance Characteristics (continued)

Switch Current Limit vs. $\overline{\text{SHDN}}$ Pin Voltage (Soft-start Implementation, LM2842)

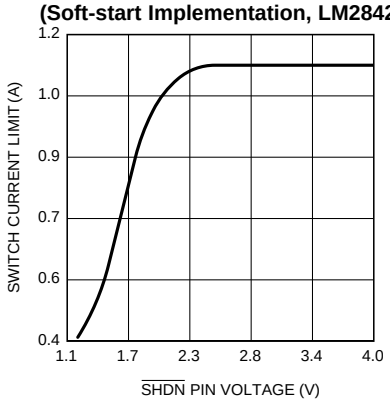

$\overline{\text{SHDN}}$ Pin Current vs. $\overline{\text{SHDN}}$ Pin Voltage

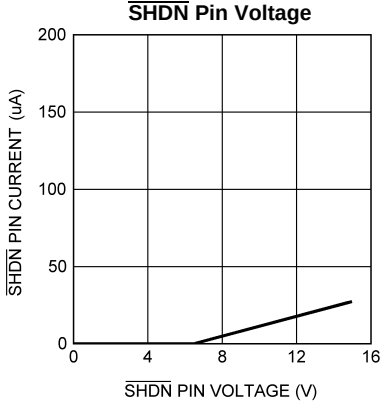

Switching Node and Output Voltage Waveforms

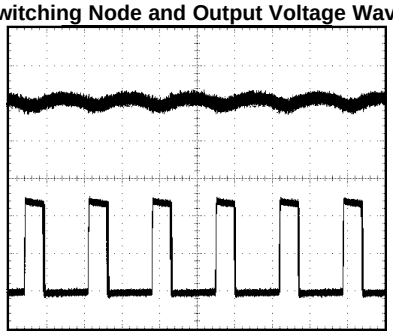

V_{IN} = 12V, V_{OUT} = 3.3V, I_{OUT} = 200 mA
Top trace: V_{OUT}, 10 mV/div, AC Coupled
Bottom trace: SW, 5V/div, DC Coupled
T = 1 µs/div

Load Transient Waveforms

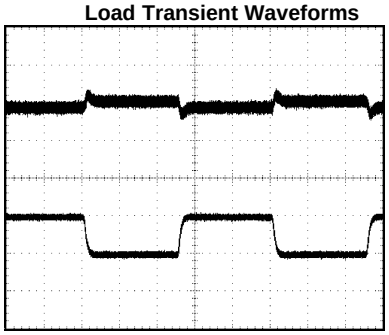

V_{IN} = 12V, V_{OUT} = 3.3V, I_{OUT} = 300 mA to 200 mA to 300 mA
Top trace: V_{OUT}, 20 mV/div, AC Coupled
Bottom trace: I_{OUT}, 100 mA/div, DC Coupled
T = 200 µs/div

Start-up Waveform

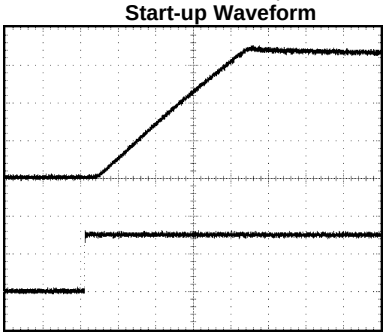

V_{IN} = 12V, V_{OUT} = 3.3V, I_{OUT} = 50 mA
Top trace: V_{OUT}, 1V/div, DC Coupled
Bottom trace: $\overline{\text{SHDN}}$, 2V/div, DC Coupled
T = 40 µs/div

Copyright © 2009–2012, Texas Instruments Incorporated

Block Diagram

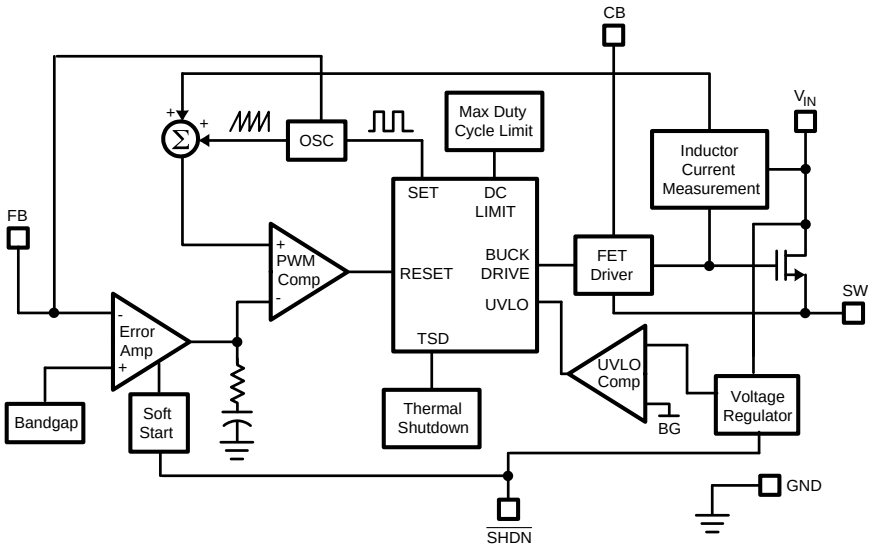

Operation

PROTECTION

The LM2840/1/2 has dedicated protection circuitry running during normal operation to protect the IC. The thermal shutdown circuitry turns off the power device when the die temperature reaches excessive levels. The UVLO comparator protects the power device during supply power startup and shutdown to prevent operation at voltages less than the minimum input voltage. A gate drive (CB) under-voltage lockout is included to guarantee that there is enough gate drive voltage to drive the MOSFET before the device tries to start switching. The LM2840/1/2 also features a shutdown mode decreasing the supply current to approximately 16 µA.

CONTINUOUS CONDUCTION MODE

The LM2840/1/2 contains a current-mode, PWM buck regulator. A buck regulator steps the input voltage down to a lower output voltage. In continuous conduction mode (when the inductor current never reaches zero at steady state), the buck regulator operates in two cycles. The power switch is connected between V_{IN} and SW. In the first cycle of operation the transistor is closed and the diode is reverse biased. Energy is collected in the inductor and the load current is supplied by C_{OUT} and the rising current through the inductor. During the second cycle the transistor is open and the diode is forward biased due to the fact that the inductor current cannot instantaneously change direction. The energy stored in the inductor is transferred to the load and output capacitor. The ratio of these two cycles determines the output voltage. The output voltage is defined approximately as: $D=V_{OUT}/V_{IN}$ and D' = (1-D) where D is the duty cycle of the switch. D and D' will be required for design calculations.

DESIGN PROCEDURE

This section presents guidelines for selecting external components.

SETTING THE OUTPUT VOLTAGE

The output voltage is set using the feedback pin and a resistor divider connected to the output as shown on the front page schematic. The feedback pin voltage 0.765V, so the ratio of the feedback resistors sets the output voltage according to the following equation: V_{OUT}=0.765V(1+(R1/R2)) Typically R2 will be given as 100Ω-10 kΩ for a starting value. To solve for R1 given R2 and V_{OUT} use R1=R2((V_{OUT}/0.765V)-1).

Copyright © 2009–2012, Texas Instruments Incorporated

INPUT CAPACITOR

A low ESR ceramic capacitor (C_{IN}) is needed between the V_{IN} pin and GND pin. This capacitor prevents large voltage transients from appearing at the input. Use a 2.2 µF-10 µF value with X5R or X7R dielectric. Depending on construction, a ceramic capacitor's value can decrease up to 50% of its nominal value when rated voltage is applied. Consult with the capacitor manufacturer's data sheet for information on capacitor derating over voltage and temperature.

INDUCTOR SELECTION

The most critical parameters for the inductor are the inductance, peak current, and the DC resistance. The inductance is related to the peak-to-peak inductor ripple current, the input and the output voltages.

$$L = \frac{(V_{IN} - V_{OUT})V_{OUT}}{V_{IN} \times I_{RIPPLE} \times f_{SW}} \quad (1)$$

A higher value of ripple current reduces inductance, but increases the conductance loss, core loss, and current stress for the inductor and switch devices. It also requires a bigger output capacitor for the same output voltage ripple requirement. A reasonable value is setting the ripple current to be 30% of the DC output current. Since the ripple current increases with the input voltage, the maximum input voltage is always used to determine the inductance. The DC resistance of the inductor is a key parameter for the efficiency. Lower DC resistance is available with a bigger winding area. A good tradeoff between the efficiency and the core size is letting the inductor copper loss equal 2% of the output power. See AN-1197 for more information on selecting inductors. A good starting point for most applications is a 10 µH to 22 µH with 1.1A or greater current rating for the LM2842 or a 0.7A or greater current rating for the LM2840/41. Using such a rating will enable the LM2840/1/2 to current limit without saturating the inductor. This is preferable to the LM2840/1/2 going into thermal shutdown mode and the possibility of damaging the inductor if the output is shorted to ground or other longterm overload.

OUTPUT CAPACITOR

The selection of C_{OUT} is driven by the maximum allowable output voltage ripple. The output ripple in the constant frequency, PWM mode is approximated by: $V_{RIPPLE} = I_{RIPPLE}(ESR+(1/(8f_{SW}C_{OUT})))$ The ESR term usually plays the dominant role in determining the voltage ripple. Low ESR ceramic capacitors are recommended. Capacitors in the range of 22 µF-100 µF are a good starting point with an ESR of 0.1Ω or less.

BOOTSTRAP CAPACITOR

A 0.15 µF ceramic capacitor or larger is recommended for the bootstrap capacitor (C_{BOOT}). For applications where the input voltage is less than twice the output voltage a larger capacitor is recommended, generally 0.15 µF to 1 µF to ensure plenty of gate drive for the internal switches and a consistently low R_{DSON}.

SOFT-START COMPONENTS

The LM2840/1/2 has circuitry that is used in conjunction with the $\overline{SHDN}$ pin to limit the inrush current on start-up of the DC/DC switching regulator. The $\overline{SHDN}$ pin in conjunction with a RC filter is used to tailor the soft-start for a specific application. When a voltage applied to the $\overline{SHDN}$ pin is between 0V and up to 2.3V it will cause the cycle by cycle current limit in the power stage to be modulated for minimum current limit at 0V up to the rated current limit at 2.3V. Thus controlling the output rise time and inrush current at startup. The resistor value should be selected so the current sourced into the $\overline{SHDN}$ pin will be greater then the leakage current of the $\overline{SHDN}$ pin (1.5 µA) when the voltage at $\overline{SHDN}$ is equal or greater then 2.3V.

SHUTDOWN OPERATION

The $\overline{SHDN}$ pin of the LM2840/1/2 is designed so that it may be controlled using 2.3V or higher logic signals. If the shutdown function is not to be used the $\overline{SHDN}$ pin may be tied to V_{IN}. The maximum voltage to the $\overline{SHDN}$ pin should not exceed 42V. If the use of a higher voltage is desired due to system or other constraints it may be used, however a 100 kΩ or larger resistor is recommended between the applied voltage and the $\overline{SHDN}$ pin to protect the device.

Copyright © 2009–2012, Texas Instruments Incorporated

SCHOTTKY DIODE

The breakdown voltage rating of the diode (D1) is preferred to be 25% higher than the maximum input voltage. The current rating for the diode should be equal to the maximum output current for best reliability in most applications. In cases where the duty cycle is greater than 50%, the average diode current is lower. In this case it is possible to use a diode with a lower average current rating, approximately $(1-D)I_{OUT}$, however the peak current rating should be higher than the maximum load current. A 0.5A to 1A rated diode is a good starting point.

LAYOUT CONSIDERATIONS

To reduce problems with conducted noise pick up, the ground side of the feedback network should be connected directly to the GND pin with its own connection. The feedback network, resistors R1 and R2, should be kept close to the FB pin, and away from the inductor to minimize coupling noise into the feedback pin. The input bypass capacitor C_{IN} must be placed close to the V_{IN} pin. This will reduce copper trace resistance which effects input voltage ripple of the IC. The inductor L1 should be placed close to the SW pin to reduce EMI and capacitive coupling. The output capacitor, C_{OUT} should be placed close to the junction of L1 and the diode D1. The L1, D1, and C_{OUT} trace should be as short as possible to reduce conducted and radiated noise and increase overall efficiency. The ground connection for the diode, C_{IN}, and C_{OUT} should be as small as possible and tied to the system ground plane in only one spot (preferably at the C_{OUT} ground point) to minimize conducted noise in the system ground plane. For more detail on switching power supply layout considerations see Application Note AN-1149: *Layout Guidelines for Switching Power Supplies.*

Application Information

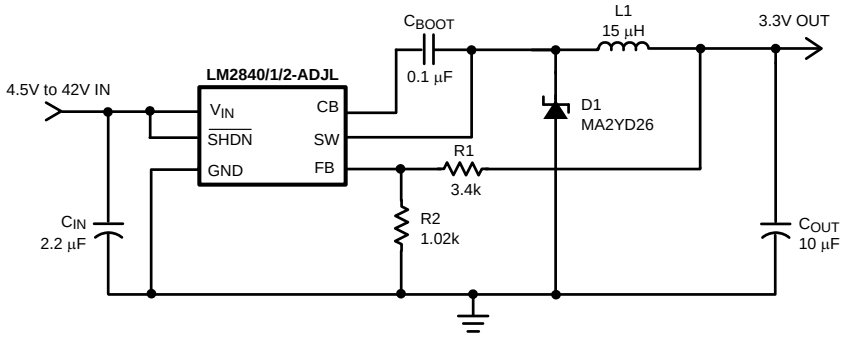

Figure 2. Application Circuit, 3.3V Output @ 100 mA

Table 1. Some Recommended Inductors (Others May Be Used)

Manufacturer	Inductor	Contact Information
Coilcraft	LPS4018, DO1608C, DO3308, and LPO2506 series	www.coilcraft.com 800-3222645
MuRata	LQH55D and LQH66S series	www.murata.com
Coiltronics	MP2 and MP2A series	www.cooperbussman.com

Table 2. Some Recommended Input And Output Capacitors (Others May Be Used)

Manufacturer	Capacitor	Contact Information
Vishay Sprague	293D, 592D, and 595D series tantalum	www.vishay.com 407-324-4140
Taiyo Yuden	High capacitance MLCC ceramic	www.t-yuden.com 408-573-4150
Cornell Dubilier	ESRD seriec Polymer Aluminum Electrolytic SPV and AFK series V-chip series	www.cde.com
MuRata	High capacitance MLCC ceramic	www.murata.com

Copyright © 2009–2012, Texas Instruments Incorporated

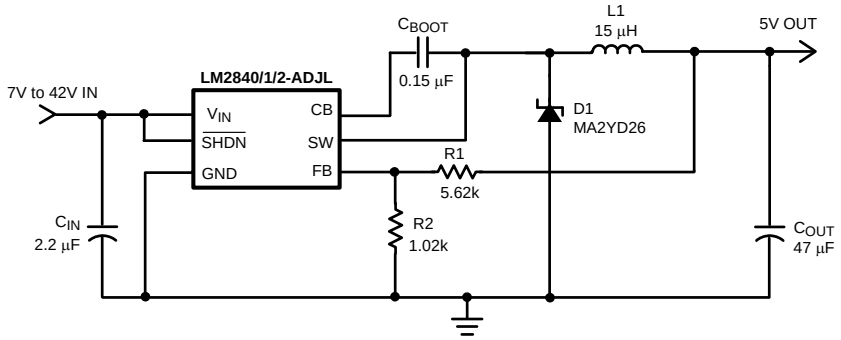

Figure 3. Application Circuit, 5V Output

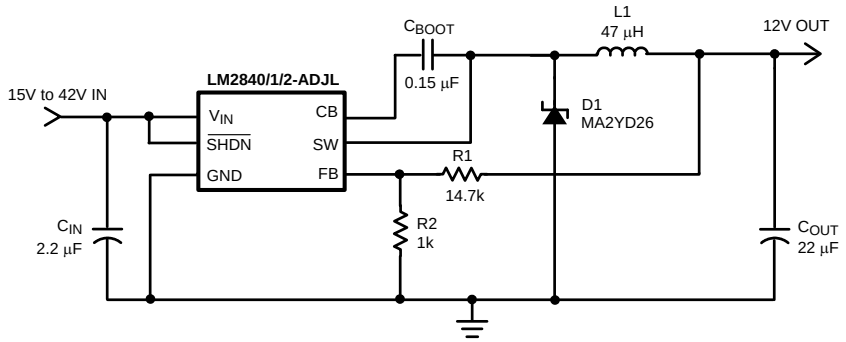

Figure 4. Application Circuit, 12V Output

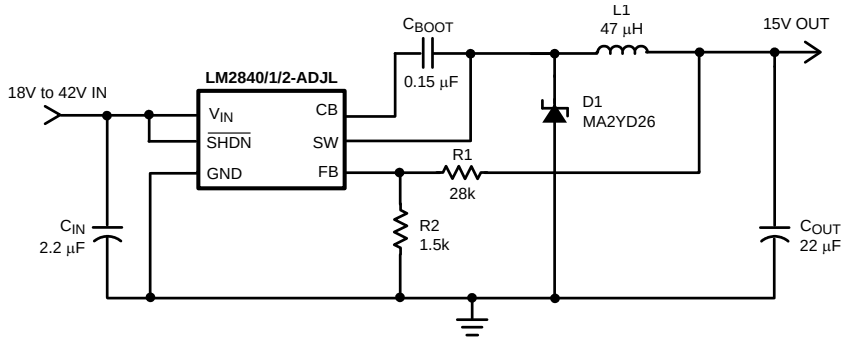

Figure 5. Application Circuit, 15V Output

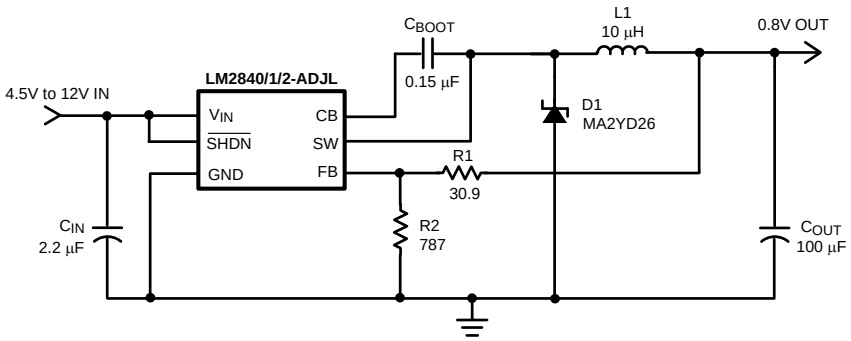

Figure 6. Application Circuit, 0.8V Output

Copyright © 2009–2012, Texas Instruments Incorporated

PACKAGING INFORMATION

Orderable Device	Status (1)	Package Type	Package Drawing	Pins	Package Qty	Eco Plan (2)	Lead/Ball Finish	MSL Peak Temp (3)	Samples (Requires Login)
LM2840XMK-ADJL/NOPB	ACTIVE	SOT	DDC	6	1000	Green (RoHS & no Sb/Br)	CU SN	Level-1-260C-UNLIM	
LM2840XMKX-ADJL/NOPB	ACTIVE	SOT	DDC	6	3000	Green (RoHS & no Sb/Br)	CU SN	Level-1-260C-UNLIM	
LM2840XQMK/NOPB	ACTIVE	SOT	DDC	6	1000	Green (RoHS & no Sb/Br)	CU SN	Level-1-260C-UNLIM	
LM2840XQMKX/NOPB	ACTIVE	SOT	DDC	6	3000	Green (RoHS & no Sb/Br)	CU SN	Level-1-260C-UNLIM	
LM2840YMK-ADJL/NOPB	ACTIVE	SOT	DDC	6	1000	Green (RoHS & no Sb/Br)	CU SN	Level-1-260C-UNLIM	
LM2840YMKX-ADJL/NOPB	ACTIVE	SOT	DDC	6	3000	Green (RoHS & no Sb/Br)	CU SN	Level-1-260C-UNLIM	
LM2840YQMK/NOPB	ACTIVE	SOT	DDC	6	1000	Green (RoHS & no Sb/Br)	CU SN	Level-1-260C-UNLIM	
LM2840YQMKX/NOPB	ACTIVE	SOT	DDC	6	3000	Green (RoHS & no Sb/Br)	CU SN	Level-1-260C-UNLIM	
LM2841XMK-ADJL/NOPB	ACTIVE	SOT	DDC	6	1000	Green (RoHS & no Sb/Br)	CU SN	Level-1-260C-UNLIM	
LM2841XMKX-ADJL/NOPB	ACTIVE	SOT	DDC	6	3000	Green (RoHS & no Sb/Br)	CU SN	Level-1-260C-UNLIM	
LM2841XQMK/NOPB	ACTIVE	SOT	DDC	6	1000	Green (RoHS & no Sb/Br)	CU SN	Level-1-260C-UNLIM	
LM2841XQMKX/NOPB	ACTIVE	SOT	DDC	6	3000	Green (RoHS & no Sb/Br)	CU SN	Level-1-260C-UNLIM	
LM2841YMK-ADJL/NOPB	ACTIVE	SOT	DDC	6	1000	Green (RoHS & no Sb/Br)	CU SN	Level-1-260C-UNLIM	
LM2841YMKX-ADJL/NOPB	ACTIVE	SOT	DDC	6	3000	Green (RoHS & no Sb/Br)	CU SN	Level-1-260C-UNLIM	
LM2841YQMK/NOPB	ACTIVE	SOT	DDC	6	1000	Green (RoHS & no Sb/Br)	CU SN	Level-1-260C-UNLIM	
LM2841YQMKX/NOPB	ACTIVE	SOT	DDC	6	3000	Green (RoHS & no Sb/Br)	CU SN	Level-1-260C-UNLIM	
LM2842XMK-ADJL/NOPB	ACTIVE	SOT	DDC	6	1000	Green (RoHS & no Sb/Br)	CU SN	Level-1-260C-UNLIM	

Orderable Device	Status (1)	Package Type	Package Drawing	Pins	Package Qty	Eco Plan (2)	Lead/Ball Finish	MSL Peak Temp (3)	Samples (Requires Login)
LM2842XMKX-ADJL/NOPB	ACTIVE	SOT	DDC	6	3000	Green (RoHS & no Sb/Br)	CU SN	Level-1-260C-UNLIM	
LM2842XQMK/NOPB	ACTIVE	SOT	DDC	6	1000	Green (RoHS & no Sb/Br)	CU SN	Level-1-260C-UNLIM	
LM2842XQMKX/NOPB	ACTIVE	SOT	DDC	6	3000	Green (RoHS & no Sb/Br)	CU SN	Level-1-260C-UNLIM	
LM2842YMK-ADJL/NOPB	ACTIVE	SOT	DDC	6	1000	Green (RoHS & no Sb/Br)	CU SN	Level-1-260C-UNLIM	
LM2842YMKX-ADJL/NOPB	ACTIVE	SOT	DDC	6	3000	Green (RoHS & no Sb/Br)	CU SN	Level-1-260C-UNLIM	
LM2842YQMK/NOPB	ACTIVE	SOT	DDC	6	1000	Green (RoHS & no Sb/Br)	CU SN	Level-1-260C-UNLIM	
LM2842YQMKX/NOPB	ACTIVE	SOT	DDC	6	3000	Green (RoHS & no Sb/Br)	CU SN	Level-1-260C-UNLIM	

(1) The marketing status values are defined as follows:
ACTIVE: Product device recommended for new designs.
LIFEBUY: TI has announced that the device will be discontinued, and a lifetime-buy period is in effect.
NRND: Not recommended for new designs. Device is in production to support existing customers, but TI does not recommend using this part in a new design.
PREVIEW: Device has been announced but is not in production. Samples may or may not be available.
OBSOLETE: TI has discontinued the production of the device.

(2) Eco Plan - The planned eco-friendly classification: Pb-Free (RoHS), Pb-Free (RoHS Exempt), or Green (RoHS & no Sb/Br) - please check http://www.ti.com/productcontent for the latest availability information and additional product content details.
TBD: The Pb-Free/Green conversion plan has not been defined.
Pb-Free (RoHS): TI's terms "Lead-Free" or "Pb-Free" mean semiconductor products that are compatible with the current RoHS requirements for all 6 substances, including the requirement that lead not exceed 0.1% by weight in homogeneous materials. Where designed to be soldered at high temperatures, TI Pb-Free products are suitable for use in specified lead-free processes.
Pb-Free (RoHS Exempt): This component has a RoHS exemption for either 1) lead-based flip-chip solder bumps used between the die and package, or 2) lead-based die adhesive used between the die and leadframe. The component is otherwise considered Pb-Free (RoHS compatible) as defined above.
Green (RoHS & no Sb/Br): TI defines "Green" to mean Pb-Free (RoHS compatible), and free of Bromine (Br) and Antimony (Sb) based flame retardants (Br or Sb do not exceed 0.1% by weight in homogeneous material)

(3) MSL, Peak Temp. -- The Moisture Sensitivity Level rating according to the JEDEC industry standard classifications, and peak solder temperature.

Important Information and Disclaimer: The information provided on this page represents TI's knowledge and belief as of the date that it is provided. TI bases its knowledge and belief on information provided by third parties, and makes no representation or warranty as to the accuracy of such information. Efforts are underway to better integrate information from third parties. TI has taken and continues to take reasonable steps to provide representative and accurate information but may not have conducted destructive testing or chemical analysis on incoming materials and chemicals. TI and TI suppliers consider certain information to be proprietary, and thus CAS numbers and other limited information may not be available for release.

In no event shall TI's liability arising out of such information exceed the total purchase price of the TI part(s) at issue in this document sold by TI to Customer on an annual basis.

OTHER QUALIFIED VERSIONS OF LM2840, LM2840-Q1, LM2841, LM2841-Q1, LM2842, LM2842-Q1 :

- Catalog: LM2840, LM2841, LM2842
- Automotive: LM2840-Q1, LM2841-Q1, LM2842-Q1

NOTE: Qualified Version Definitions:

- Catalog - TI's standard catalog product
- Automotive - Q100 devices qualified for high-reliability automotive applications targeting zero defects

TAPE AND REEL INFORMATION

REEL DIMENSIONS

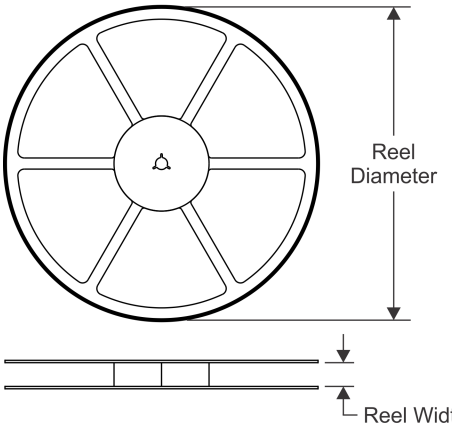

TAPE DIMENSIONS

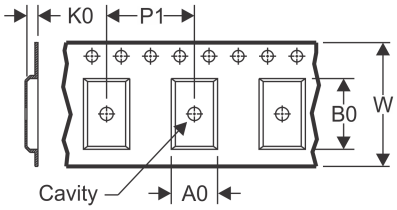

A0	Dimension designed to accommodate the component width
B0	Dimension designed to accommodate the component length
K0	Dimension designed to accommodate the component thickness
W	Overall width of the carrier tape
P1	Pitch between successive cavity centers

QUADRANT ASSIGNMENTS FOR PIN 1 ORIENTATION IN TAPE

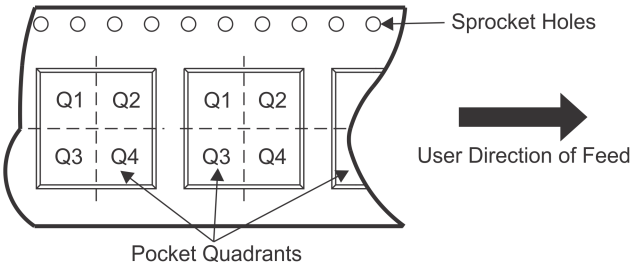

*All dimensions are nominal

Device	Package Type	Package Drawing	Pins	SPQ	Reel Diameter (mm)	Reel Width W1 (mm)	A0 (mm)	B0 (mm)	K0 (mm)	P1 (mm)	W (mm)	Pin1 Quadrant
LM2840XMK-ADJL/NOPB	SOT	DDC	6	1000	178.0	8.4	3.2	3.2	1.4	4.0	8.0	Q3
LM2840XMKX-ADJL/NOPB	SOT	DDC	6	3000	178.0	8.4	3.2	3.2	1.4	4.0	8.0	Q3
LM2840XQMK/NOPB	SOT	DDC	6	1000	178.0	8.4	3.2	3.2	1.4	4.0	8.0	Q3
LM2840XQMKX/NOPB	SOT	DDC	6	3000	178.0	8.4	3.2	3.2	1.4	4.0	8.0	Q3
LM2840YMK-ADJL/NOPB	SOT	DDC	6	1000	178.0	8.4	3.2	3.2	1.4	4.0	8.0	Q3
LM2840YMKX-ADJL/NOPB	SOT	DDC	6	3000	178.0	8.4	3.2	3.2	1.4	4.0	8.0	Q3
LM2840YQMK/NOPB	SOT	DDC	6	1000	178.0	8.4	3.2	3.2	1.4	4.0	8.0	Q3
LM2840YQMKX/NOPB	SOT	DDC	6	3000	178.0	8.4	3.2	3.2	1.4	4.0	8.0	Q3
LM2841XMK-ADJL/NOPB	SOT	DDC	6	1000	178.0	8.4	3.2	3.2	1.4	4.0	8.0	Q3
LM2841XMKX-ADJL/NOPB	SOT	DDC	6	3000	178.0	8.4	3.2	3.2	1.4	4.0	8.0	Q3
LM2841XQMK/NOPB	SOT	DDC	6	1000	178.0	8.4	3.2	3.2	1.4	4.0	8.0	Q3
LM2841XQMKX/NOPB	SOT	DDC	6	3000	178.0	8.4	3.2	3.2	1.4	4.0	8.0	Q3
LM2841YMK-ADJL/NOPB	SOT	DDC	6	1000	178.0	8.4	3.2	3.2	1.4	4.0	8.0	Q3
LM2841YMKX-ADJL/NOPB	SOT	DDC	6	3000	178.0	8.4	3.2	3.2	1.4	4.0	8.0	Q3
LM2841YQMK/NOPB	SOT	DDC	6	1000	178.0	8.4	3.2	3.2	1.4	4.0	8.0	Q3

Device	Package Type	Package Drawing	Pins	SPQ	Reel Diameter (mm)	Reel Width W1 (mm)	A0 (mm)	B0 (mm)	K0 (mm)	P1 (mm)	W (mm)	Pin1 Quadrant
LM2841YQMKX/NOPB	SOT	DDC	6	3000	178.0	8.4	3.2	3.2	1.4	4.0	8.0	Q3
LM2842XMK-ADJL/NOPB	SOT	DDC	6	1000	178.0	8.4	3.2	3.2	1.4	4.0	8.0	Q3
LM2842XMKX-ADJL/NOPB	SOT	DDC	6	3000	178.0	8.4	3.2	3.2	1.4	4.0	8.0	Q3
LM2842XQMK/NOPB	SOT	DDC	6	1000	178.0	8.4	3.2	3.2	1.4	4.0	8.0	Q3
LM2842XQMKX/NOPB	SOT	DDC	6	3000	178.0	8.4	3.2	3.2	1.4	4.0	8.0	Q3
LM2842YMK-ADJL/NOPB	SOT	DDC	6	1000	178.0	8.4	3.2	3.2	1.4	4.0	8.0	Q3
LM2842YMKX-ADJL/NOPB	SOT	DDC	6	3000	178.0	8.4	3.2	3.2	1.4	4.0	8.0	Q3
LM2842YQMK/NOPB	SOT	DDC	6	1000	178.0	8.4	3.2	3.2	1.4	4.0	8.0	Q3
LM2842YQMKX/NOPB	SOT	DDC	6	3000	178.0	8.4	3.2	3.2	1.4	4.0	8.0	Q3

TAPE AND REEL BOX DIMENSIONS

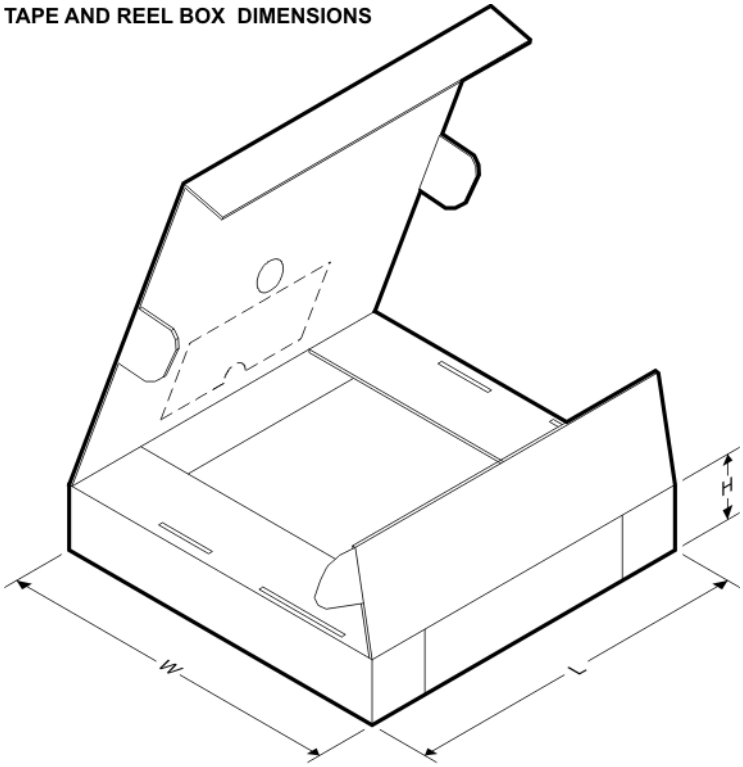

*All dimensions are nominal

Device	Package Type	Package Drawing	Pins	SPQ	Length (mm)	Width (mm)	Height (mm)
LM2840XMK-ADJL/NOPB	SOT	DDC	6	1000	203.0	190.0	41.0
LM2840XMKX-ADJL/NOPB	SOT	DDC	6	3000	206.0	191.0	90.0
LM2840XQMK/NOPB	SOT	DDC	6	1000	203.0	190.0	41.0
LM2840XQMKX/NOPB	SOT	DDC	6	3000	206.0	191.0	90.0
LM2840YMK-ADJL/NOPB	SOT	DDC	6	1000	203.0	190.0	41.0
LM2840YMKX-ADJL/NOP	SOT	DDC	6	3000	206.0	191.0	90.0

Device	Package Type	Package Drawing	Pins	SPQ	Length (mm)	Width (mm)	Height (mm)
B							
LM2840YQMK/NOPB	SOT	DDC	6	1000	203.0	190.0	41.0
LM2840YQMKX/NOPB	SOT	DDC	6	3000	206.0	191.0	90.0
LM2841XMK-ADJL/NOPB	SOT	DDC	6	1000	203.0	190.0	41.0
LM2841XMKX-ADJL/NOPB	SOT	DDC	6	3000	206.0	191.0	90.0
LM2841XQMK/NOPB	SOT	DDC	6	1000	203.0	190.0	41.0
LM2841XQMKX/NOPB	SOT	DDC	6	3000	206.0	191.0	90.0
LM2841YMK-ADJL/NOPB	SOT	DDC	6	1000	203.0	190.0	41.0
LM2841YMKX-ADJL/NOPB	SOT	DDC	6	3000	206.0	191.0	90.0
LM2841YQMK/NOPB	SOT	DDC	6	1000	203.0	190.0	41.0
LM2841YQMKX/NOPB	SOT	DDC	6	3000	206.0	191.0	90.0
LM2842XMK-ADJL/NOPB	SOT	DDC	6	1000	203.0	190.0	41.0
LM2842XMKX-ADJL/NOPB	SOT	DDC	6	3000	206.0	191.0	90.0
LM2842XQMK/NOPB	SOT	DDC	6	1000	203.0	190.0	41.0
LM2842XQMKX/NOPB	SOT	DDC	6	3000	206.0	191.0	90.0
LM2842YMK-ADJL/NOPB	SOT	DDC	6	1000	203.0	190.0	41.0
LM2842YMKX-ADJL/NOPB	SOT	DDC	6	3000	206.0	191.0	90.0
LM2842YQMK/NOPB	SOT	DDC	6	1000	203.0	190.0	41.0
LM2842YQMKX/NOPB	SOT	DDC	6	3000	206.0	191.0	90.0

DDC (R–PDSO–G6) PLASTIC SMALL–OUTLINE

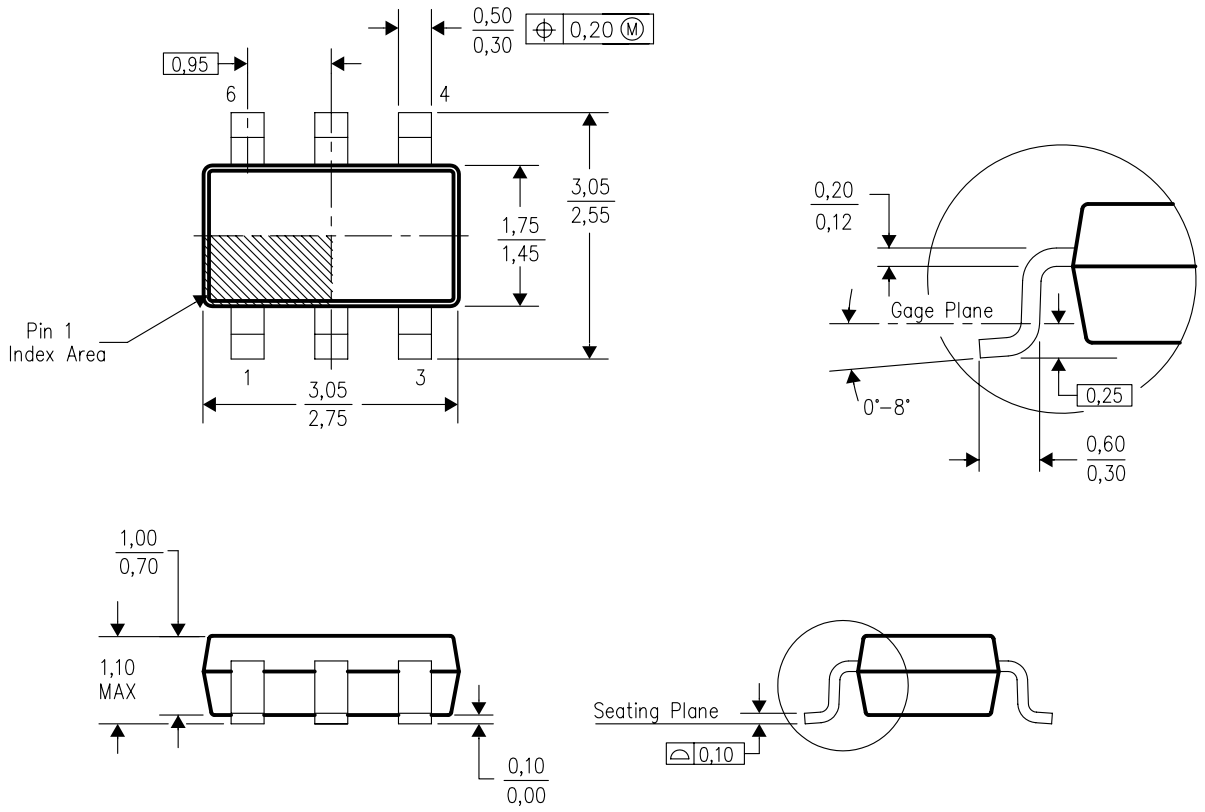

4204403–3/E 06/05

NOTES:
A. All linear dimensions are in millimeters.
B. This drawing is subject to change without notice.
C. Body dimensions do not include mold flash or protrusion.
D. Falls within JEDEC MO–193 variation AA (6 pin).

IMPORTANT NOTICE

Texas Instruments Incorporated and its subsidiaries (TI) reserve the right to make corrections, enhancements, improvements and other changes to its semiconductor products and services per JESD46, latest issue, and to discontinue any product or service per JESD48, latest issue. Buyers should obtain the latest relevant information before placing orders and should verify that such information is current and complete. All semiconductor products (also referred to herein as “components”) are sold subject to TI’s terms and conditions of sale supplied at the time of order acknowledgment.

TI warrants performance of its components to the specifications applicable at the time of sale, in accordance with the warranty in TI’s terms and conditions of sale of semiconductor products. Testing and other quality control techniques are used to the extent TI deems necessary to support this warranty. Except where mandated by applicable law, testing of all parameters of each component is not necessarily performed.

TI assumes no liability for applications assistance or the design of Buyers’ products. Buyers are responsible for their products and applications using TI components. To minimize the risks associated with Buyers’ products and applications, Buyers should provide adequate design and operating safeguards.

TI does not warrant or represent that any license, either express or implied, is granted under any patent right, copyright, mask work right, or other intellectual property right relating to any combination, machine, or process in which TI components or services are used. Information published by TI regarding third-party products or services does not constitute a license to use such products or services or a warranty or endorsement thereof. Use of such information may require a license from a third party under the patents or other intellectual property of the third party, or a license from TI under the patents or other intellectual property of TI.

Reproduction of significant portions of TI information in TI data books or data sheets is permissible only if reproduction is without alteration and is accompanied by all associated warranties, conditions, limitations, and notices. TI is not responsible or liable for such altered documentation. Information of third parties may be subject to additional restrictions.

Resale of TI components or services with statements different from or beyond the parameters stated by TI for that component or service voids all express and any implied warranties for the associated TI component or service and is an unfair and deceptive business practice. TI is not responsible or liable for any such statements.

Buyer acknowledges and agrees that it is solely responsible for compliance with all legal, regulatory and safety-related requirements concerning its products, and any use of TI components in its applications, notwithstanding any applications-related information or support that may be provided by TI. Buyer represents and agrees that it has all the necessary expertise to create and implement safeguards which anticipate dangerous consequences of failures, monitor failures and their consequences, lessen the likelihood of failures that might cause harm and take appropriate remedial actions. Buyer will fully indemnify TI and its representatives against any damages arising out of the use of any TI components in safety-critical applications.

In some cases, TI components may be promoted specifically to facilitate safety-related applications. With such components, TI’s goal is to help enable customers to design and create their own end-product solutions that meet applicable functional safety standards and requirements. Nonetheless, such components are subject to these terms.

No TI components are authorized for use in FDA Class III (or similar life-critical medical equipment) unless authorized officers of the parties have executed a special agreement specifically governing such use.

Only those TI components which TI has specifically designated as military grade or “enhanced plastic” are designed and intended for use in military/aerospace applications or environments. Buyer acknowledges and agrees that any military or aerospace use of TI components which have ***not*** been so designated is solely at the Buyer's risk, and that Buyer is solely responsible for compliance with all legal and regulatory requirements in connection with such use.

TI has specifically designated certain components as meeting ISO/TS16949 requirements, mainly for automotive use. In any case of use of non-designated products, TI will not be responsible for any failure to meet ISO/TS16949.

Products		**Applications**	
Audio	www.ti.com/audio	Automotive and Transportation	www.ti.com/automotive
Amplifiers	amplifier.ti.com	Communications and Telecom	www.ti.com/communications
Data Converters	dataconverter.ti.com	Computers and Peripherals	www.ti.com/computers
DLP® Products	www.dlp.com	Consumer Electronics	www.ti.com/consumer-apps
DSP	dsp.ti.com	Energy and Lighting	www.ti.com/energy
Clocks and Timers	www.ti.com/clocks	Industrial	www.ti.com/industrial
Interface	interface.ti.com	Medical	www.ti.com/medical
Logic	logic.ti.com	Security	www.ti.com/security
Power Mgmt	power.ti.com	Space, Avionics and Defense	www.ti.com/space-avionics-defense
Microcontrollers	microcontroller.ti.com	Video and Imaging	www.ti.com/video
RFID	www.ti-rfid.com		
OMAP Applications Processors	www.ti.com/omap	**TI E2E Community**	e2e.ti.com
Wireless Connectivity	www.ti.com/wirelessconnectivity		

Mailing Address: Texas Instruments, Post Office Box 655303, Dallas, Texas 75265
Copyright © 2012, Texas Instruments Incorporated