LMC555 CMOS Timer

1 Features

- Less Than 1-mW Typical Power Dissipation at 5-V Supply
- 3-MHz Astable Frequency Capability
- 1.5-V Supply Operating Voltage Ensured
- Output Fully Compatible With TTL and CMOS Logic at 5-V Supply
- Tested to −10-mA, 50-mA Output Current Levels
- Reduced Supply Current Spikes During Output Transitions
- Extremely Low Reset, Trigger, and Threshold Currents
- Excellent Temperature Stability
- Pin-for-Pin Compatible With 555 Series of Timers
- Available in 8-Pin VSSOP Package and 8-Bump DSBGA Package

2 Applications

- Precision Timing
- Pulse Generation
- Sequential Timing
- Time Delay Generation
- Pulse Width Modulation
- Pulse Position Modulation
- Linear Ramp Generators

3 Description

The LMC555 device is a CMOS version of the industry standard 555 series general-purpose timers. In addition to the standard package (SOIC, VSSSOP, and PDIP) the LMC555 is also available in a chip-sized package (8-bump DSBGA) using TI's DSBGA package technology. The LMC555 offers the same capability of generating accurate time delays and frequencies as the LM555 but with much lower power dissipation and supply current spikes. When operated as a one-shot, the time delay is precisely controlled by a single external resistor and capacitor. In the stable mode the oscillation frequency and duty cycle are accurately set by two external resistors and one capacitor. The use of TI's LMCMOS process extends both the frequency range and the low supply capability.

Device Information(1)

PART NUMBER	PACKAGE	BODY SIZE (NOM)
LMC555	SOIC (8)	4.90 mm × 3.91 mm
	VSSOP (8)	3.00 mm × 3.00 mm
	PDIP (8)	9.81 × 6.35
	DSBGA (8)	—

(1) For all available packages, see the orderable addendum at the end of the data sheet.

Pulse Width Modulator

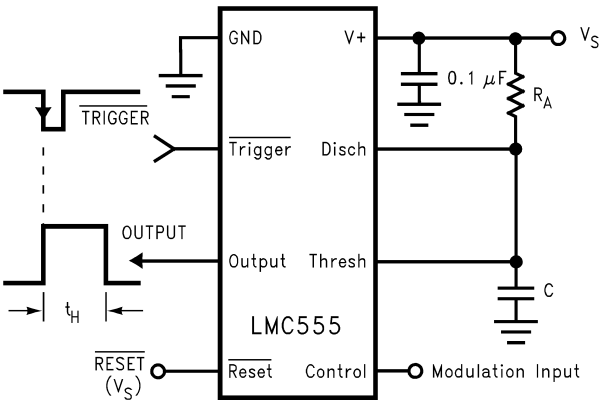

Pulse Width Modulator Waveform:
Top Waveform - Modulation
Bottom Waveform - Output Voltage

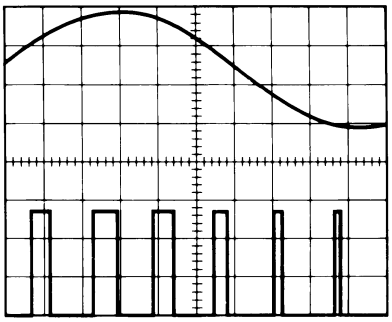

An IMPORTANT NOTICE at the end of this data sheet addresses availability, warranty, changes, use in safety-critical applications, intellectual property matters and other important disclaimers. PRODUCTION DATA.

Table of Contents

1 Features ... 1
2 Applications ... 1
3 Description ... 1
4 Revision History ... 2
5 Pin Configuration and Functions ... 3
6 Specifications ... 4
6.1 Absolute Maximum Ratings ... 4
6.2 ESD Ratings ... 4
6.3 Recommended Operating Conditions ... 4
6.4 Thermal Information ... 4
6.5 Electrical Characteristics ... 5
7 Parameter Measurement Information ... 6
8 Detailed Description ... 7
8.1 Overview ... 7
8.2 Functional Block Diagram ... 7
8.3 Feature Description ... 7
8.4 Device Functional Modes ... 8
9 Application and Implementation ... 12
9.1 Application Information ... 12
9.2 Typical Application ... 12
10 Power Supply Recommendations ... 14
11 Layout ... 14
11.1 Layout Guidelines ... 14
11.2 Layout Example ... 14
12 Device and Documentation SupportChanged layout of National Data Sheet to TI format ... 15
12.1 Trademarks ... 15
12.2 Electrostatic Discharge Caution ... 15
12.3 Glossary ... 15
13 Mechanical, Packaging, and Orderable Information ... 15

4 Revision History

Changes from Revision J (March 2013) to Revision K	Page
• Added *Pin Configuration and Functions* section, *ESD Ratings* table, *Feature Description* section, *Device Functional Modes*, *Application and Implementation* section, *Power Supply Recommendations* section, *Layout* section, *Device and Documentation Support* section, and *Mechanical, Packaging, and Orderable Information* section	1

Changes from Revision I (March 2013) to Revision J	Page
• Changed layout of National Data Sheet to TI format	15

Copyright © 2000–2015, Texas Instruments Incorporated

5 Pin Configuration and Functions

D, DGK, and P Packages
8-Pin SOIC, VSSOP, and PDIP
(Top View)

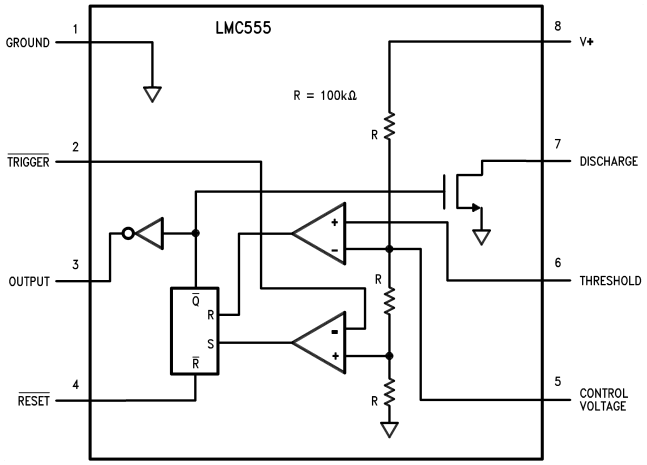

YPB Package
8-Pin DSBGA
(Top View)

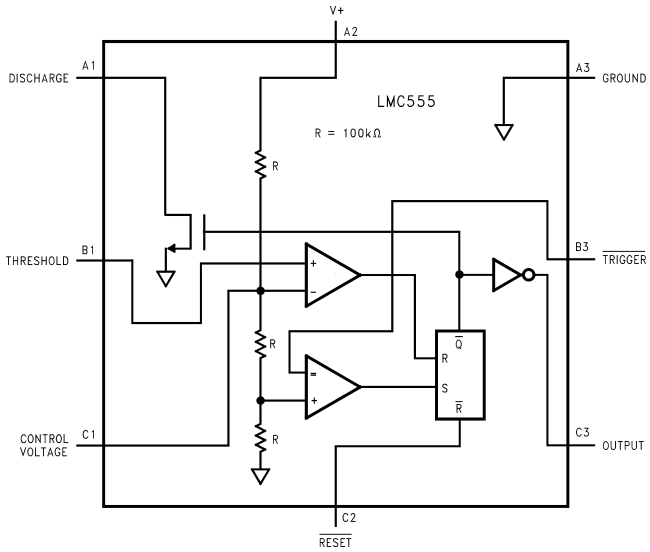

Pin Functions

PIN			I/O	DESCRIPTION
SOIC, VSSOP, and PDIP NO.	DSBGA NO.	NAME		
1	A3	GND	O	Ground reference voltage
2	B3	$\overline{\text{Trigger}}$	I	Responsible for transition of the flip-flop from set to reset. The output of the timer depends on the amplitude of the external trigger pulse applied to this pin
3	C3	Output	O	Output driven waveform
4	C2	$\overline{\text{Reset}}$	I	Negative pulse applied to this pin to disable or reset the timer. When not used for reset purposes, it should be connected to VCC to avoid false triggering
5	C1	Control Voltage	I	Control voltage controls the threshold and trigger levels. It determines the pulse width of the output waveform. An external voltage applied to this pin can also be used to modulate the output waveform
6	B1	Threshold	I	Compares the voltage applied to the terminal with a reference voltage of 2/3 Vcc. The amplitude of voltage applied to this terminal is responsible for the set state of the flip-flop.
7	A1	Discharge	I	Open collector output which discharges a capacitor between intervals (in phase with output). It toggles the output from high to low when voltage reaches 2/3 of the supply voltage
8	A2	V^+	I	Supply voltage with respect to GND

Copyright © 2000–2015, Texas Instruments Incorporated

6 Specifications

6.1 Absolute Maximum Ratings

Over operating free-air temperature range, unless otherwise noted.[1][2][3]

		MIN	MAX	UNIT
Voltage	Supply		15	V
	Input	–0.3	(V+) + 0.3	V
	Output		15	V
Curent	Output		100	mA
Storage temperature, T_{stg}		–65	150	°C

(1) Stresses beyond those listed under *Absolute Maximum Ratings* may cause permanent damage to the device. These are stress ratings only, which do not imply functional operation of the device at these or any other conditions beyond those indicated under *Recommended Operating Conditions*. Exposure to absolute-maximum-rated conditions for extended periods may affect device reliability.
(2) See AN-1112 (SNVA009) for DSBGA considerations.
(3) If Military/Aerospace specified devices are required, please contact the TI Sales Office/Distributors for availability and specifications.

6.2 ESD Ratings

			VALUE	UNIT
$V_{(ESD)}$	Electrostatic discharge	Human body model (HBM), per ANSI/ESDA/JEDEC JS-001[1]	±1500	V

(1) JEDEC document JEP155 states that 500-V HBM allows safe manufacturing with a standard ESD control process.

6.3 Recommended Operating Conditions

over operating free-air temperature range (unless otherwise noted)

		MIN	NOM	MAX	UNIT
Temperature Range	LMC555IM	−40		125	°C
	LMC555CM/MM/N/TP	−40		185	°C
Maximum Allowable Power Dissipation at 25°C	PDIP-8			1126	mW
	SOIC-8			740	mW
	VSSOP-8			555	mW
	8-bump DSBGA			568	mW

6.4 Thermal Information

THERMAL METRIC[1]		LMC555				UNIT
		SOIC	VSSOP	PDIP	8-BUMP DSBGA	
		8 PINS	8 PINS	8 PINS	8 PINS	
$R_{\theta JA}$	Junction-to-ambient thermal resistance	169	225	111	220	°C/W

(1) For more information about traditional and new thermal metrics, see the *IC Package Thermal Metrics* application report, SPRA953.

Copyright © 2000–2015, Texas Instruments Incorporated

6.5 Electrical Characteristics

Test Circuit, T = 25°C, all switches open, $\overline{RESET}$ to V_S unless otherwise noted(1)

PARAMETER		TEST CONDITIONS	MIN	TYP	MAX	UNIT
I_S	Supply Current	V_S = 1.5 V V_S = 5 V V_S = 12 V		50 100 150	150 250 400	µA
V_{CTRL}	Control Voltage	V_S = 1.5 V V_S = 5 V V_S = 12 V	0.8 2.9 7.4	1.0 3.3 8.0	1.2 3.8 8.6	V
V_{DIS}	Discharge Saturation Voltage	V_S = 1.5 V, I_{DIS} = 1 mA V_S = 5 V, I_{DIS} = 10 mA		75 150	150 300	mV
V_{OL}	Output Voltage (Low)	V_S = 1.5 V, I_O = 1 mA V_S = 5 V, I_O = 8 mA V_S = 12 V, I_O = 50 mA		0.2 0.3 1.0	0.4 0.6 2.0	V
V_{OH}	Output Voltage (High)	V_S = 1.5 V, I_O = −0.25 mA V_S = 5 V, I_O = −2 mA V_S = 12 V, I_O = −10 mA	1.0 4.4 10.5	1.25 4.7 11.3		V
V_{TRIG}	Trigger Voltage	V_S = 1.5V V_S = 12V	0.4 3.7	0.5 4.0	0.6 4.3	V
I_{TRIG}	Trigger Current	V_S = 5V		10		pA
V_{RES}	Reset Voltage	V_S = 1.5 V (2) V_S = 12 V	0.4 0.4	0.7 0.75	1.0 1.1	V
I_{RES}	Reset Current	V_S = 5 V		10		pA
I_{THRESH}	Threshold Current	V_S = 5 V		10		pA
I_{DIS}	Discharge Leakage	V_S = 12 V		1.0	100	nA
t	Timing Accuracy	SW 2, 4 Closed V_S = 1.5 V V_S = 5 V V_S = 12 V	 0.9 1.0 1.0	 1.1 1.1 1.1	 1.25 1.20 1.25	ms
$\Delta t/\Delta V_S$	Timing Shift with Supply	V_S = 5V ± 1 V		0.3%		V
$\Delta t/\Delta T$	Timing Shift with Temperature	V_S = 5 V		75		ppm/°C
f_A	Astable Frequency	SW 1, 3 Closed, V_S = 12 V	4.0	4.8	5.6	kHz
f_{MAX}	Maximum Frequency	Max. Freq. Test Circuit, V_S = 5 V		3.0		MHz
t_R, t_F	Output Rise and Fall Times	Max. Freq. Test Circuit V_S = 5V, C_L = 10 pF		15		ns
t_{PD}	Trigger Propagation Delay	V_S = 5 V, Measure Delay from Trigger to Output		100		ns

(1) All voltages are measured with respect to the ground pin, unless otherwise specified.
(2) If the $\overline{RESET}$ pin is to be used at temperatures of −20°C and below V_S is required to be 2.0 V or greater.

Copyright © 2000–2015, Texas Instruments Incorporated

7 Parameter Measurement Information

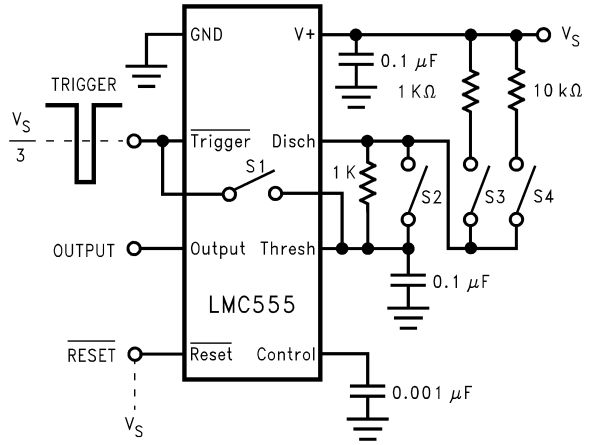

For device pinout, see *Pin Configuration and Functions*.

Figure 1. Test Circuit

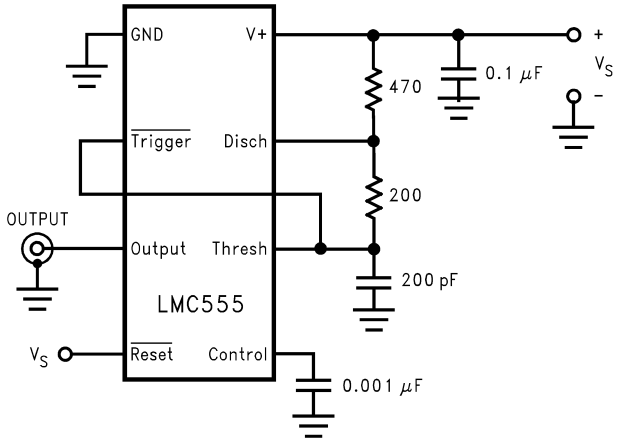

For device pinout, see *Pin Configuration and Functions*.

Figure 2. Maximum Frequency Test Circuit

Copyright © 2000–2015, Texas Instruments Incorporated

8 Detailed Description

8.1 Overview

The LMC555 is a CMOS version of the industry standard 555 series general-purpose timers. In addition to the standard package (SOIC, VSSSOP, and PDIP) the LMC555 is also available in a chip-sized package (8-bump DSBGA) using TI's DSBGA package technology. The LMC555 offers the same capability of generating accurate time delays and frequencies as the LM555 but with much lower power dissipation and supply current spikes. When operated as a one-shot, the time delay is precisely controlled by a single external resistor and capacitor. In the stable mode, the oscillation frequency and duty cycle are accurately set by two external resistors and one capacitor. The use of TI's LMCMOS process extends both the frequency range and the low supply capability. The LMC555 is available in an 8-pin PDIP, SOIC, VSSOP, and 8-bump DSBGA package.

8.2 Functional Block Diagram

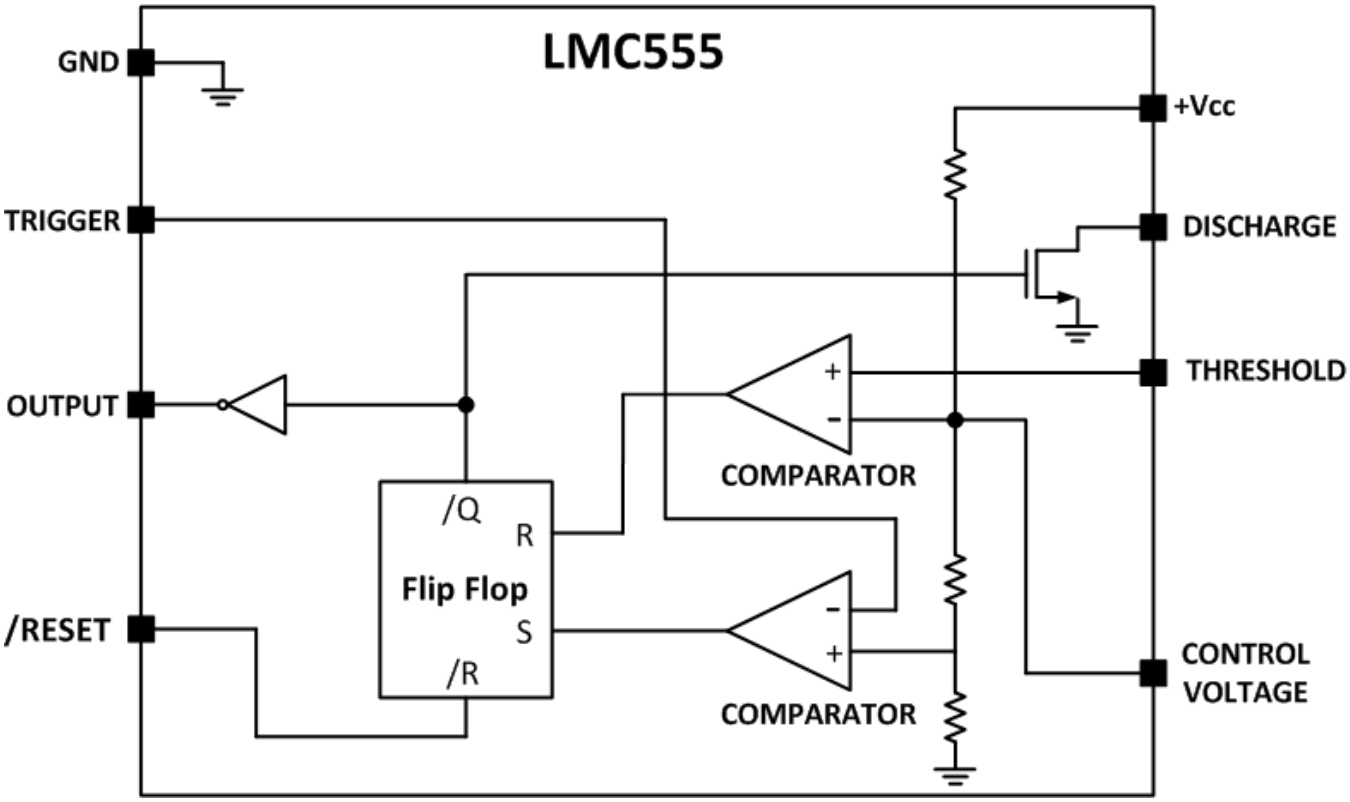

8.3 Feature Description

8.3.1 Low-Power Dissipation

The LMC555 offers the same capability of generating accurate time delays and frequencies as the LM555 but with much lower power dissipation. A power dissipation of less than 0.2 mW can be achieved with a 1.5-V operating supply voltage and less than 1 mW with a 5-V operating supply voltage. The use of TI's LMCMOS process allows this low supply current and voltage capability. Reduced supply current spikes during output transitions and extremely low reset, trigger and threshold currents also provide low power dissipation advantages with the LMC555.

Feature Description (continued)

8.3.2 Various Packages and Compatibility

There are various packages available for use of the LMC555. In addition to the standard package (8-pin SOIC, VSSOP, and PDIP, the LMC555 is also available in a chip-sized package (8-bump DSBGA). The PDIP, SOIC, and VSSOP packages for the LMC555 are pin-for-pin compatible with the 555 series of timers (NE555/SE555/LM555) allowing flexibility in design and unnecessary modifications to PCB schematics and layouts.

8.3.3 Operates in Both Astable and Monostable Mode

The LMC555 can operate in both astable and monostable mode depending on the application requirements.

- Monostable mode: The LMC555 timer acts as a “one-shot” pulse generator. The pulse beings when the LMC555 timer receives a signal at the trigger input that falls below a 1/3 of the voltage supply. The width of the output pulse is determined by the time constant of an RC network. The output pulse ends when the voltage on the capacitor equals 2/3 of the supply voltage. The output pulse width can be extended or shortened depending on the application by adjusting the R and C values.
- Astable (free-running) mode: The LMC555 timer can operate as an oscillator and puts out a continuous stream of rectangular pulses having a specified frequency. The frequency of the pulse stream depends on the values of RA, RB, and C.

8.4 Device Functional Modes

8.4.1 Monostable Operation

In this mode of operation, the timer functions as a one-shot (Figure 3). The external capacitor is initially held discharged by internal circuitry. Upon application of a negative trigger pulse of less than 1/3 V_S to the $\overline{\text{Trigger}}$ terminal, the flip-flop is set which both releases the short circuit across the capacitor and drives the output high.

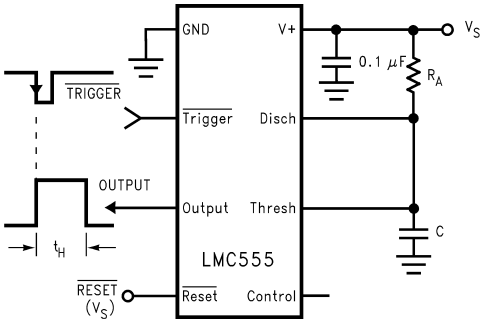

Figure 3. Monostable (One-Shot)

The voltage across the capacitor then increases exponentially for a period of $t_H = 1.1\ R_AC$, which is also the time that the output stays high, at the end of which time the voltage equals 2/3 V_S. The comparator then resets the flip-flop which in turn discharges the capacitor and drives the output to its low state. Figure 4 shows the waveforms generated in this mode of operation. Because the charge and the threshold level of the comparator are both directly proportional to supply voltage, the timing internal is independent of supply.

Copyright © 2000–2015, Texas Instruments Incorporated

Device Functional Modes (continued)

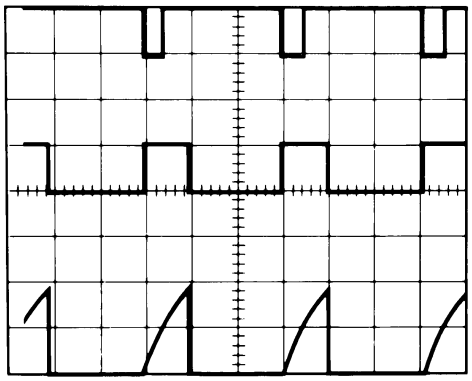

V_{CC} = 5 V
TIME = 0.1 ms/Div.
R_A = 9.1 kΩ
C = 0.01 µF

Top Trace: Input 5 V/Div.
Middle Trace: Output 5 V/Div.
Bottom Trace: Capacitor Voltage 2 V/Div.

Figure 4. Monostable Waveforms

Reset overrides Trigger, which can override threshold. Therefore the trigger pulse must be shorter than the desired t_H. The minimum pulse width for the Trigger is 20 ns, and it is 400 ns for the Reset. During the timing cycle when the output is high, the further application of a trigger pulse will not effect the circuit so long as the trigger input is returned high at least 10 µs before the end of the timing interval. However the circuit can be reset during this time by the application of a negative pulse to the reset terminal. The output will then remain in the low state until a trigger pulse is again applied.

When the reset function is not use, it is recommended that it be connected to V_+ to avoid any possibility of false triggering. Figure 5 is a nomograph for easy determination of RC values for various time delays.

NOTE

In monstable operation, the trigger should be driven high before the end of timing cycle.

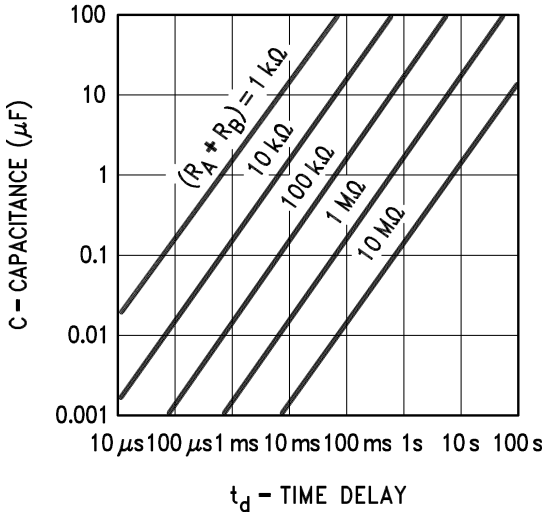

Figure 5. Time Delay

Device Functional Modes (continued)

8.4.2 Astable Operation

If the circuit is connected as shown in Figure 6 ($\overline{\text{Trigger}}$ and Threshold terminals connected together) it will trigger itself and free run as a multivibrator. The external capacitor charges through R_A + R_B and discharges through R_B. Thus the duty cycle may be precisely set by the ratio of these two resistors.

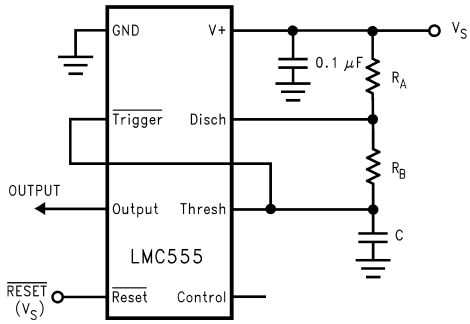

Figure 6. Astable (Variable Duty Cycle Oscillator)

In this mode of operation, the capacitor charges and discharges between 1/3 V_S and 2/3 V_S. As in the triggered mode, the charge and discharge times, and therefore the frequency are independent of the supply voltage.

Figure 7 shows the waveform generated in this mode of operation.

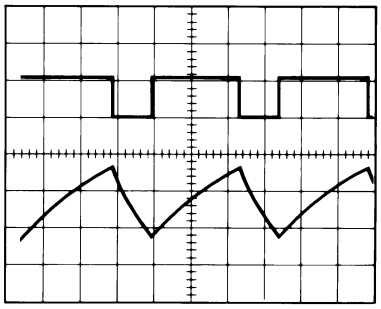

V_{CC} = 5 V
TIME = 20 µs/Div.
R_A = 3.9 kΩ
R_B = 9 kΩ
C = 0.01 µF

Top Trace: Output 5 V/Div.
Bottom Trace: Capacitor Voltage 1 V/Div.

Figure 7. Astable Waveforms

The charge time (output high) is given by

$$t_1 = 0.693\ (R_A + R_B)C \tag{1}$$

And the discharge time (output low) by:

$$t_2 = 0.693\ (R_B)C \tag{2}$$

Thus the total period is:

$$T = t_1 + t_2 = 0.693\ (R_A + 2R_B)C \tag{3}$$

The frequency of oscillation is:

$$f = \frac{1}{T} = \frac{1.44}{(R_A + 2\,R_B)\,C} \tag{4}$$

Figure 8 may be used for quick determination of these RC Values. The duty cycle, as a fraction of total period that the output is low, is:

$$D = \frac{R_B}{R_A + 2R_B} \tag{5}$$

Copyright © 2000–2015, Texas Instruments Incorporated

Device Functional Modes (continued)

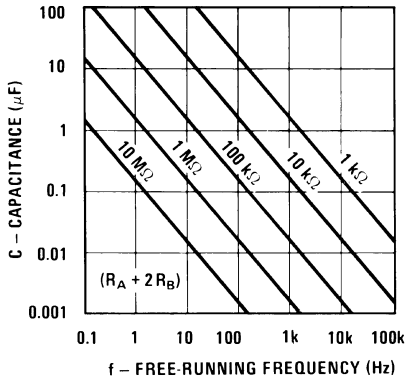

Figure 8. Free-Running Frequency

9 Application and Implementation

NOTE

Information in the following applications sections is not part of the TI component specification, and TI does not warrant its accuracy or completeness. TI's customers are responsible for determining suitability of components for their purposes. Customers should validate and test their design implementation to confirm system functionality.

9.1 Application Information

The LM555 timer can be used a various configurations, but the most commonly used configuration is in monostable mode. A typical application for the LM555 timer in monostable mode is to turn on an LED for a specific time duration. A pushbutton is used as the trigger to output a high pulse when trigger pin is pulsed low. This simple application can be modified to fit any application requirement.

9.2 Typical Application

Figure 9 shows the schematic of the LM555 that flashes an LED in monostable mode.

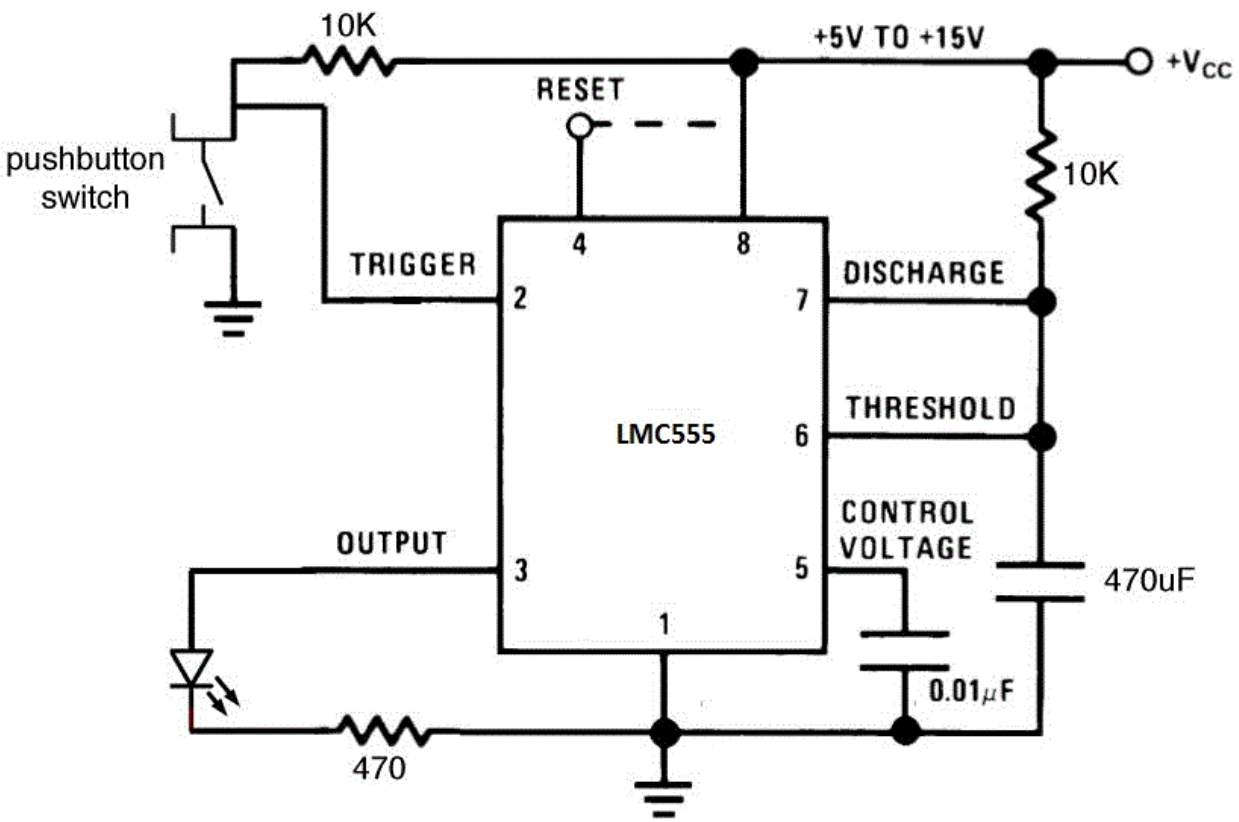

Figure 9. Schematic of Monostable Mode to Flash an LED

9.2.1 Design Requirements

The main design requirement for this application requires calculating the duration of time for which the output stays high. The duration of time is dependent on the R and C values (as shown in monostable figure) and can be calculated by: t= 1.1*R*C seconds.

$$t = 1.1 \times R \times C \quad (6)$$

Copyright © 2000–2015, Texas Instruments Incorporated

Typical Application (continued)

9.2.2 Detailed Design Procedure

To allow the LED to flash on for a noticeable amount of time, a 5-second time delay was chosen for this application. By using the equation:

$$t = 1.1 \times R \times C \text{ seconds} \tag{7}$$

where

- RC equals 4.545

If R is chosen as 100 kΩ, C = 45.4 µF. The values of R = 100 kΩ and C = 47 µF was chosen based on standard values of resistors and capacitors.

A momentary push button switch connected to ground is connected to the trigger input with a 10-kΩ current limiting resistor pull up to the supply voltage. When the push button is pressed, the trigger pin goes to GND. An LED is connected to the output pin with a current limiting resistor in series from the output of the LMC555 to GND. The reset pin is not used and was connected to the supply voltage.

9.2.3 Application Curve

The data shown in Figure 10 was collected with the circuit used in the typical applications section. The LM555 was configured in the monostable mode with a time delay of 5.17 s. The waveforms correspond to:

- Top Waveform (Blue) – Capacitor voltage
- Middle Waveform (Purple) – Trigger
- Bottom Waveform (Green) – Output

As the trigger pin pulses low, the capacitor voltage starts charging and the output goes high. The output goes low as soon as the capacitor voltage reaches 2/3 of the supply voltage, which is the time delay set by the R and C value. For this example, the time delay is 5.17 seconds.

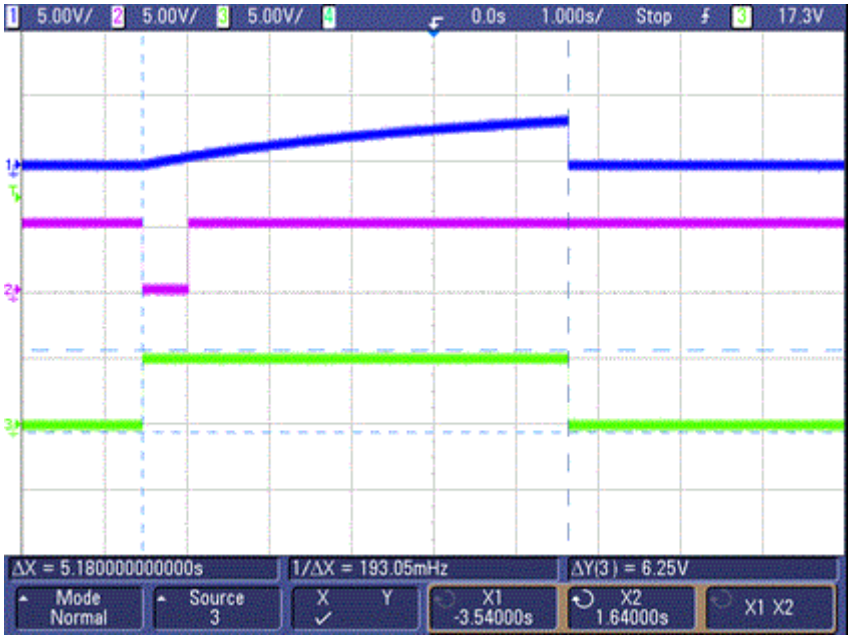

Figure 10. Trigger, Capacitor Voltage, and Output Waveforms in Monostable Mode

10 Power Supply Recommendations

The LM555 requires a voltage supply within 1.5 V to 15 V. Adequate power supply bypassing is necessary to protect associated circuitry. Minimum recommended is 0.1 µF in parallel with 1-µF electrolytic. Place the bypass capacitors as close as possible to the LM555 and minimize the trace length.

11 Layout

11.1 Layout Guidelines

Standard PCB rules apply to routing the LMC555. The 0.1 µF in parallel with a 1-µF electrolytic capacitor should be as close as possible to the LMC555. The capacitor used for the time delay should also be placed as close to the discharge pin. A ground plane on the bottom layer can be used to provide better noise immunity and signal integrity.

11.2 Layout Example

The figure below is the basic layout for various applications.

- C1 – based on time delay calculations
- C2 – 0.01 µF bypass capacitor for control voltage pin
- C3 – 0.1 µF bypass ceramic capacitor
- C4 – 1-µF electrolytic bypass capacitor
- R1 – based on time delay calculations
- U1 – LMC555

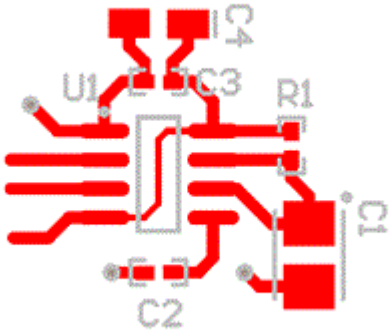

Figure 11. PCB Layout

Copyright © 2000–2015, Texas Instruments Incorporated

12 Device and Documentation Support

12.1 Trademarks

All trademarks are the property of their respective owners.

12.2 Electrostatic Discharge Caution

These devices have limited built-in ESD protection. The leads should be shorted together or the device placed in conductive foam during storage or handling to prevent electrostatic damage to the MOS gates.

12.3 Glossary

SLYZ022 — *TI Glossary*.

This glossary lists and explains terms, acronyms, and definitions.

13 Mechanical, Packaging, and Orderable Information

The following pages include mechanical, packaging, and orderable information. This information is the most current data available for the designated devices. This data is subject to change without notice and revision of this document. For browser-based versions of this data sheet, refer to the left-hand navigation.

Copyright © 2000–2015, Texas Instruments Incorporated

PACKAGING INFORMATION

Orderable Device	Status (1)	Package Type	Package Drawing	Pins	Package Qty	Eco Plan (2)	Lead/Ball Finish (6)	MSL Peak Temp (3)	Op Temp (°C)	Device Marking (4/5)	Samples
LMC555CM	NRND	SOIC	D	8	95	TBD	Call TI	Call TI	-40 to 85	LMC 555CM	
LMC555CM/NOPB	ACTIVE	SOIC	D	8	95	Green (RoHS & no Sb/Br)	CU SN	Level-1-260C-UNLIM	-40 to 85	LMC 555CM	Samples
LMC555CMM	NRND	VSSOP	DGK	8	1000	TBD	Call TI	Call TI	-40 to 85	ZC5	
LMC555CMM/NOPB	ACTIVE	VSSOP	DGK	8	1000	Green (RoHS & no Sb/Br)	CU SN	Level-1-260C-UNLIM	-40 to 85	ZC5	Samples
LMC555CMMX	NRND	VSSOP	DGK	8	3500	TBD	Call TI	Call TI	-40 to 85	ZC5	
LMC555CMMX/NOPB	ACTIVE	VSSOP	DGK	8	3500	Green (RoHS & no Sb/Br)	CU SN	Level-1-260C-UNLIM	-40 to 85	ZC5	Samples
LMC555CMX	NRND	SOIC	D	8	2500	TBD	Call TI	Call TI	-40 to 85	LMC 555CM	
LMC555CMX/NOPB	ACTIVE	SOIC	D	8	2500	Green (RoHS & no Sb/Br)	CU SN	Level-1-260C-UNLIM	-40 to 85	LMC 555CM	Samples
LMC555CN	LIFEBUY	PDIP	P	8	40	TBD	Call TI	Call TI	-40 to 85	LMC 555CN	
LMC555CN/NOPB	ACTIVE	PDIP	P	8	40	Green (RoHS & no Sb/Br)	CU SN	Level-1-NA-UNLIM	-40 to 85	LMC 555CN	Samples
LMC555CTP/NOPB	ACTIVE	DSBGA	YPB	8	250	Green (RoHS & no Sb/Br)	SNAGCU	Level-1-260C-UNLIM	-40 to 85	F 02	Samples
LMC555CTPX/NOPB	ACTIVE	DSBGA	YPB	8	3000	Green (RoHS & no Sb/Br)	SNAGCU	Level-1-260C-UNLIM	-40 to 85	F 02	Samples
LMC555IM/NOPB	ACTIVE	SOIC	D	8	95	Green (RoHS & no Sb/Br)	CU SN	Level-1-260C-UNLIM	-40 to 125	LMC 555IM	Samples
LMC555IMX/NOPB	ACTIVE	SOIC	D	8	2500	Green (RoHS & no Sb/Br)	CU SN	Level-1-260C-UNLIM	-40 to 125	LMC 555IM	Samples

(1) The marketing status values are defined as follows:
ACTIVE: Product device recommended for new designs.
LIFEBUY: TI has announced that the device will be discontinued, and a lifetime-buy period is in effect.
NRND: Not recommended for new designs. Device is in production to support existing customers, but TI does not recommend using this part in a new design.
PREVIEW: Device has been announced but is not in production. Samples may or may not be available.
OBSOLETE: TI has discontinued the production of the device.

(2) Eco Plan - The planned eco-friendly classification: Pb-Free (RoHS), Pb-Free (RoHS Exempt), or Green (RoHS & no Sb/Br) - please check http://www.ti.com/productcontent for the latest availability information and additional product content details.
TBD: The Pb-Free/Green conversion plan has not been defined.
Pb-Free (RoHS): TI's terms "Lead-Free" or "Pb-Free" mean semiconductor products that are compatible with the current RoHS requirements for all 6 substances, including the requirement that lead not exceed 0.1% by weight in homogeneous materials. Where designed to be soldered at high temperatures, TI Pb-Free products are suitable for use in specified lead-free processes.
Pb-Free (RoHS Exempt): This component has a RoHS exemption for either 1) lead-based flip-chip solder bumps used between the die and package, or 2) lead-based die adhesive used between the die and leadframe. The component is otherwise considered Pb-Free (RoHS compatible) as defined above.
Green (RoHS & no Sb/Br): TI defines "Green" to mean Pb-Free (RoHS compatible), and free of Bromine (Br) and Antimony (Sb) based flame retardants (Br or Sb do not exceed 0.1% by weight in homogeneous material)

(3) MSL, Peak Temp. - The Moisture Sensitivity Level rating according to the JEDEC industry standard classifications, and peak solder temperature.

(4) There may be additional marking, which relates to the logo, the lot trace code information, or the environmental category on the device.

(5) Multiple Device Markings will be inside parentheses. Only one Device Marking contained in parentheses and separated by a "~" will appear on a device. If a line is indented then it is a continuation of the previous line and the two combined represent the entire Device Marking for that device.

(6) Lead/Ball Finish - Orderable Devices may have multiple material finish options. Finish options are separated by a vertical ruled line. Lead/Ball Finish values may wrap to two lines if the finish value exceeds the maximum column width.

Important Information and Disclaimer: The information provided on this page represents TI's knowledge and belief as of the date that it is provided. TI bases its knowledge and belief on information provided by third parties, and makes no representation or warranty as to the accuracy of such information. Efforts are underway to better integrate information from third parties. TI has taken and continues to take reasonable steps to provide representative and accurate information but may not have conducted destructive testing or chemical analysis on incoming materials and chemicals. TI and TI suppliers consider certain information to be proprietary, and thus CAS numbers and other limited information may not be available for release.

In no event shall TI's liability arising out of such information exceed the total purchase price of the TI part(s) at issue in this document sold by TI to Customer on an annual basis.

TAPE AND REEL INFORMATION

REEL DIMENSIONS

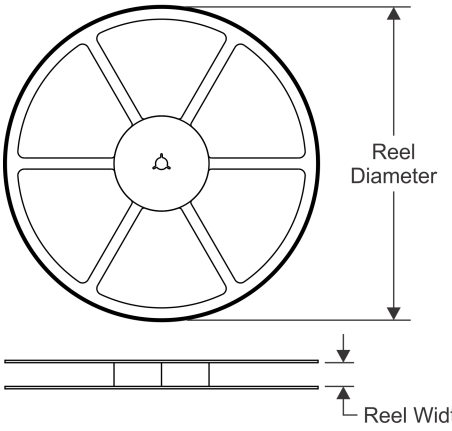

TAPE DIMENSIONS

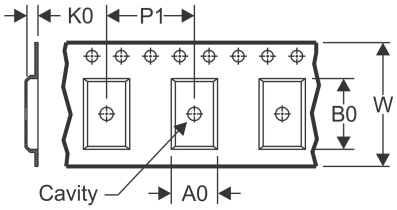

A0	Dimension designed to accommodate the component width
B0	Dimension designed to accommodate the component length
K0	Dimension designed to accommodate the component thickness
W	Overall width of the carrier tape
P1	Pitch between successive cavity centers

QUADRANT ASSIGNMENTS FOR PIN 1 ORIENTATION IN TAPE

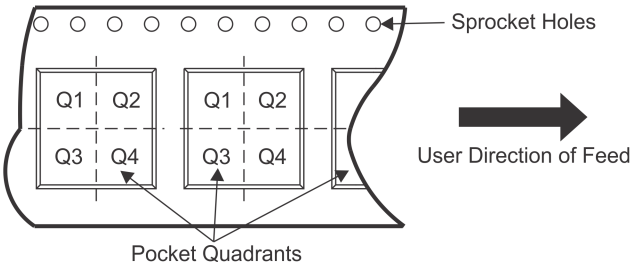

*All dimensions are nominal

Device	Package Type	Package Drawing	Pins	SPQ	Reel Diameter (mm)	Reel Width W1 (mm)	A0 (mm)	B0 (mm)	K0 (mm)	P1 (mm)	W (mm)	Pin1 Quadrant
LMC555CMM	VSSOP	DGK	8	1000	178.0	12.4	5.3	3.4	1.4	8.0	12.0	Q1
LMC555CMM/NOPB	VSSOP	DGK	8	1000	178.0	12.4	5.3	3.4	1.4	8.0	12.0	Q1
LMC555CMMX	VSSOP	DGK	8	3500	330.0	12.4	5.3	3.4	1.4	8.0	12.0	Q1
LMC555CMMX/NOPB	VSSOP	DGK	8	3500	330.0	12.4	5.3	3.4	1.4	8.0	12.0	Q1
LMC555CMX	SOIC	D	8	2500	330.0	12.4	6.5	5.4	2.0	8.0	12.0	Q1
LMC555CMX/NOPB	SOIC	D	8	2500	330.0	12.4	6.5	5.4	2.0	8.0	12.0	Q1
LMC555CTP/NOPB	DSBGA	YPB	8	250	178.0	8.4	1.5	1.5	0.66	4.0	8.0	Q1
LMC555CTPX/NOPB	DSBGA	YPB	8	3000	178.0	8.4	1.5	1.5	0.66	4.0	8.0	Q1
LMC555IMX/NOPB	SOIC	D	8	2500	330.0	12.4	6.5	5.4	2.0	8.0	12.0	Q1

TAPE AND REEL BOX DIMENSIONS

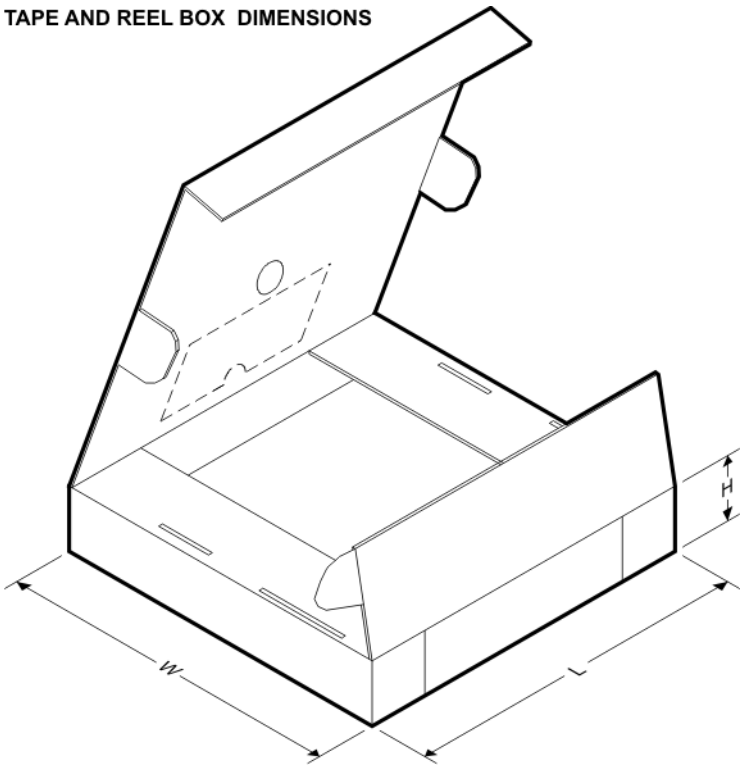

*All dimensions are nominal

Device	Package Type	Package Drawing	Pins	SPQ	Length (mm)	Width (mm)	Height (mm)
LMC555CMM	VSSOP	DGK	8	1000	210.0	185.0	35.0
LMC555CMM/NOPB	VSSOP	DGK	8	1000	210.0	185.0	35.0
LMC555CMMX	VSSOP	DGK	8	3500	367.0	367.0	35.0
LMC555CMMX/NOPB	VSSOP	DGK	8	3500	367.0	367.0	35.0
LMC555CMX	SOIC	D	8	2500	367.0	367.0	35.0
LMC555CMX/NOPB	SOIC	D	8	2500	367.0	367.0	35.0
LMC555CTP/NOPB	DSBGA	YPB	8	250	210.0	185.0	35.0
LMC555CTPX/NOPB	DSBGA	YPB	8	3000	210.0	185.0	35.0
LMC555IMX/NOPB	SOIC	D	8	2500	367.0	367.0	35.0

P (R–PDIP–T8) PLASTIC DUAL–IN–LINE PACKAGE

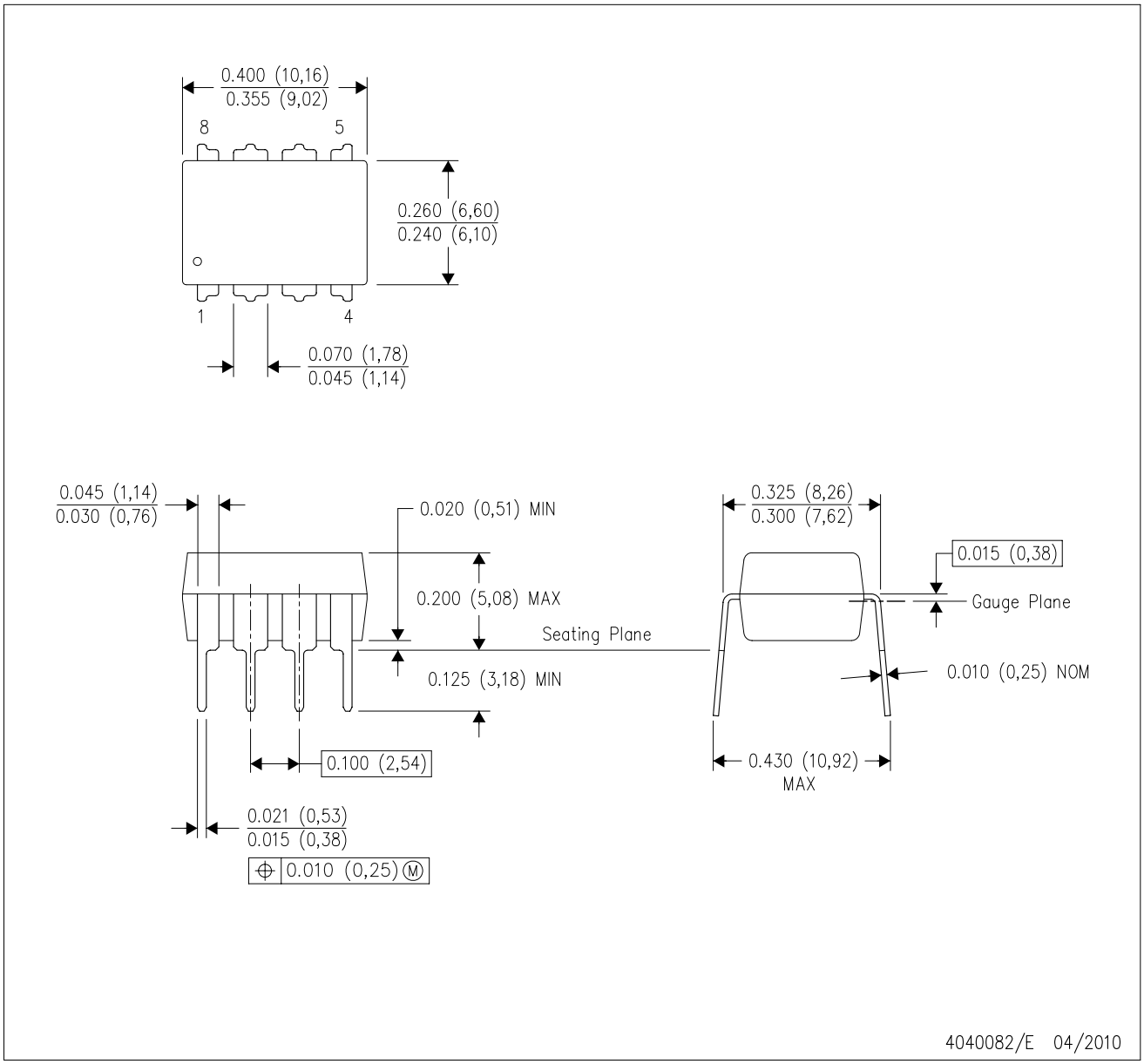

NOTES:
A. All linear dimensions are in inches (millimeters).
B. This drawing is subject to change without notice.
C. Falls within JEDEC MS–001 variation BA.

DGK (S–PDSO–G8) PLASTIC SMALL–OUTLINE PACKAGE

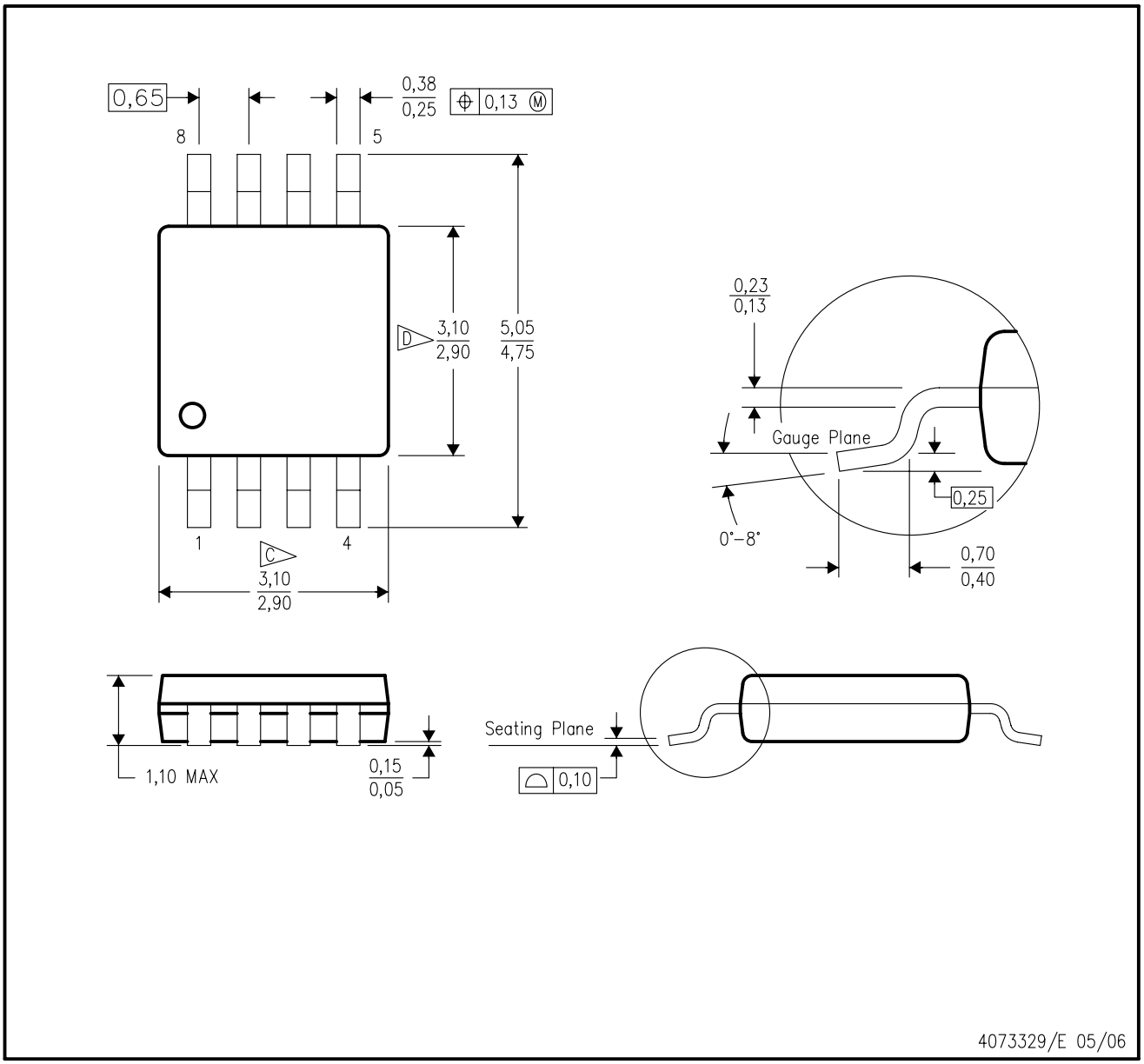

NOTES:
A. All linear dimensions are in millimeters.
B. This drawing is subject to change without notice.
C. Body length does not include mold flash, protrusions, or gate burrs. Mold flash, protrusions, or gate burrs shall not exceed 0.15 per end.
D. Body width does not include interlead flash. Interlead flash shall not exceed 0.50 per side.
E. Falls within JEDEC MO–187 variation AA, except interlead flash.

D (R–PDSO–G8) PLASTIC SMALL OUTLINE

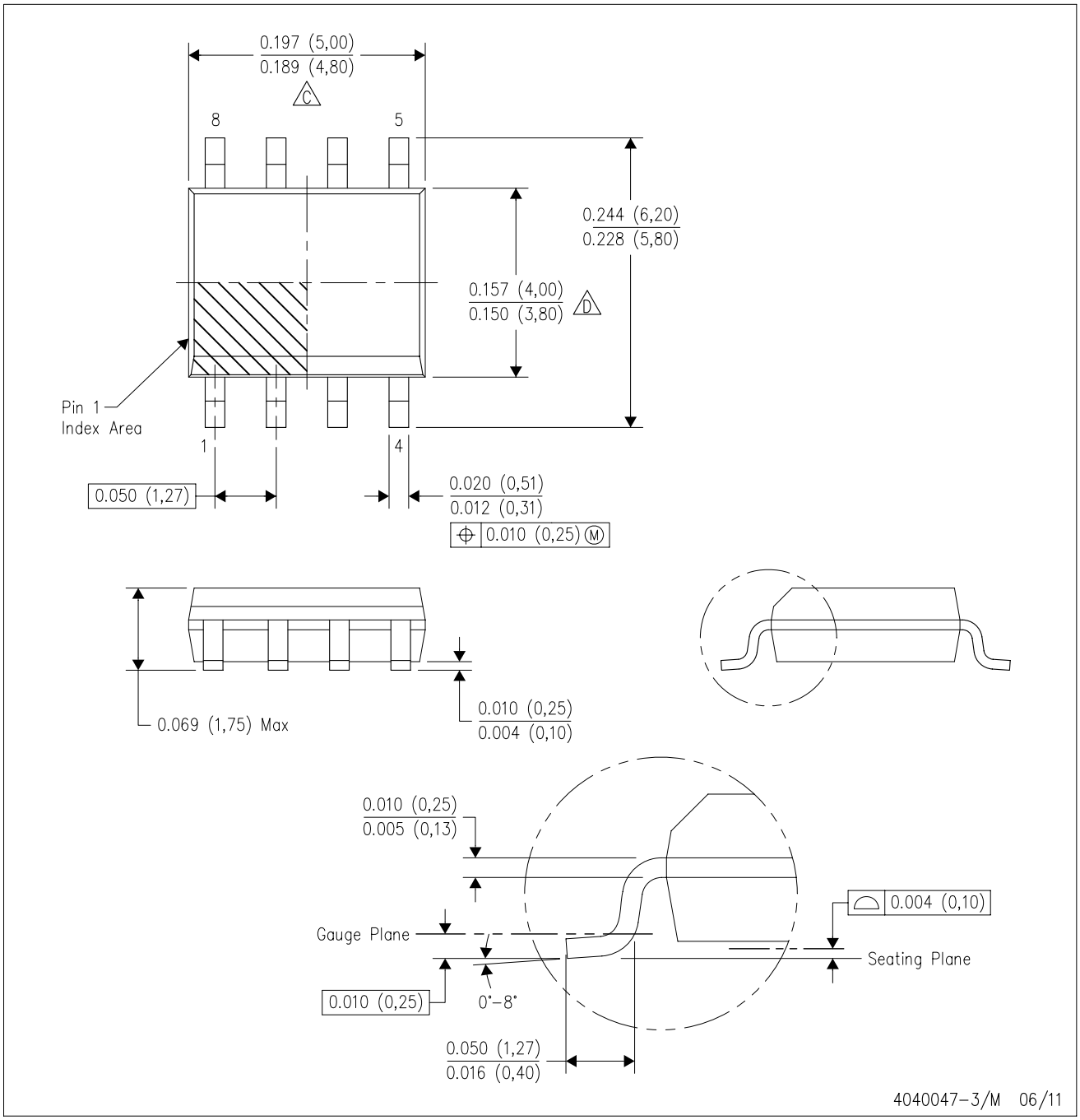

NOTES:
A. All linear dimensions are in inches (millimeters).
B. This drawing is subject to change without notice.
C. Body length does not include mold flash, protrusions, or gate burrs. Mold flash, protrusions, or gate burrs shall not exceed 0.006 (0,15) each side.
D. Body width does not include interlead flash. Interlead flash shall not exceed 0.017 (0,43) each side.
E. Reference JEDEC MS–012 variation AA.

YPB0008

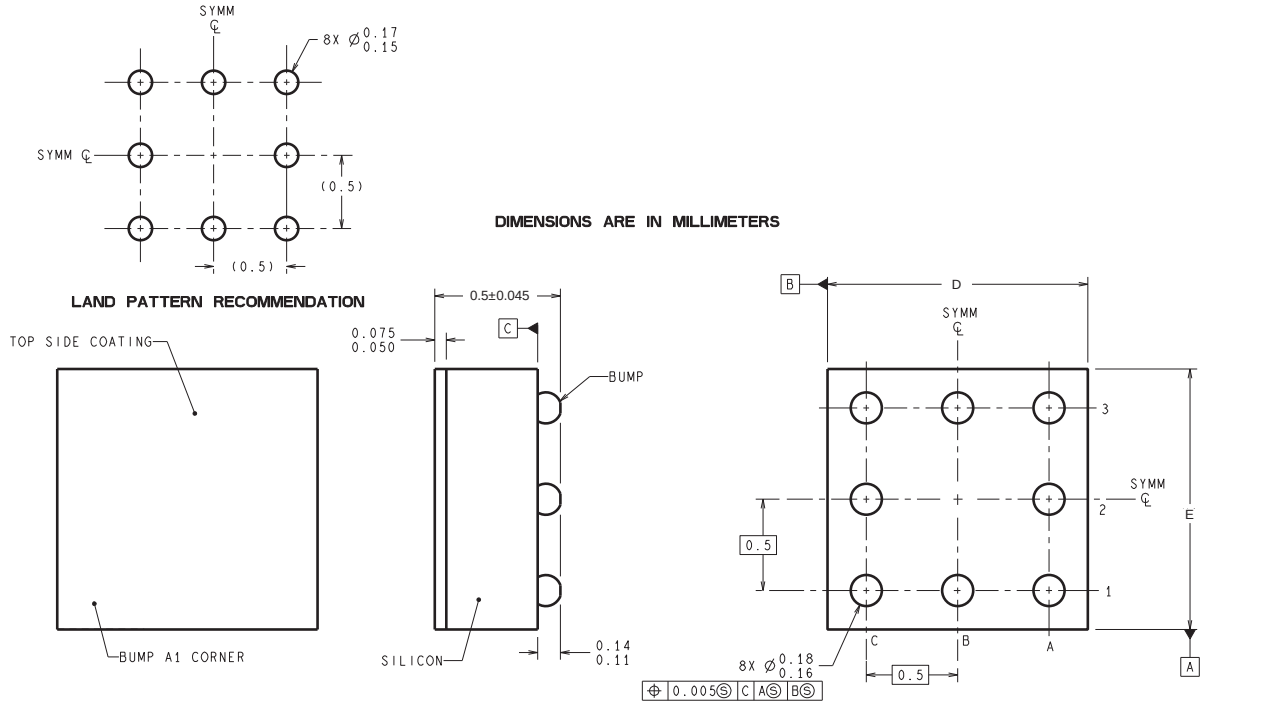

TPA08XXX (Rev A)

D: Max = 1.464 mm, Min =1.403 mm

E: Max = 1.438 mm, Min =1.377 mm

4215100/A 12/12

NOTES: A. All linear dimensions are in millimeters. Dimensioning and tolerancing per ASME Y14.5M-1994.
B. This drawing is subject to change without notice.

IMPORTANT NOTICE

Texas Instruments Incorporated and its subsidiaries (TI) reserve the right to make corrections, enhancements, improvements and other changes to its semiconductor products and services per JESD46, latest issue, and to discontinue any product or service per JESD48, latest issue. Buyers should obtain the latest relevant information before placing orders and should verify that such information is current and complete. All semiconductor products (also referred to herein as “components”) are sold subject to TI’s terms and conditions of sale supplied at the time of order acknowledgment.

TI warrants performance of its components to the specifications applicable at the time of sale, in accordance with the warranty in TI’s terms and conditions of sale of semiconductor products. Testing and other quality control techniques are used to the extent TI deems necessary to support this warranty. Except where mandated by applicable law, testing of all parameters of each component is not necessarily performed.

TI assumes no liability for applications assistance or the design of Buyers’ products. Buyers are responsible for their products and applications using TI components. To minimize the risks associated with Buyers’ products and applications, Buyers should provide adequate design and operating safeguards.

TI does not warrant or represent that any license, either express or implied, is granted under any patent right, copyright, mask work right, or other intellectual property right relating to any combination, machine, or process in which TI components or services are used. Information published by TI regarding third-party products or services does not constitute a license to use such products or services or a warranty or endorsement thereof. Use of such information may require a license from a third party under the patents or other intellectual property of the third party, or a license from TI under the patents or other intellectual property of TI.

Reproduction of significant portions of TI information in TI data books or data sheets is permissible only if reproduction is without alteration and is accompanied by all associated warranties, conditions, limitations, and notices. TI is not responsible or liable for such altered documentation. Information of third parties may be subject to additional restrictions.

Resale of TI components or services with statements different from or beyond the parameters stated by TI for that component or service voids all express and any implied warranties for the associated TI component or service and is an unfair and deceptive business practice. TI is not responsible or liable for any such statements.

Buyer acknowledges and agrees that it is solely responsible for compliance with all legal, regulatory and safety-related requirements concerning its products, and any use of TI components in its applications, notwithstanding any applications-related information or support that may be provided by TI. Buyer represents and agrees that it has all the necessary expertise to create and implement safeguards which anticipate dangerous consequences of failures, monitor failures and their consequences, lessen the likelihood of failures that might cause harm and take appropriate remedial actions. Buyer will fully indemnify TI and its representatives against any damages arising out of the use of any TI components in safety-critical applications.

In some cases, TI components may be promoted specifically to facilitate safety-related applications. With such components, TI’s goal is to help enable customers to design and create their own end-product solutions that meet applicable functional safety standards and requirements. Nonetheless, such components are subject to these terms.

No TI components are authorized for use in FDA Class III (or similar life-critical medical equipment) unless authorized officers of the parties have executed a special agreement specifically governing such use.

Only those TI components which TI has specifically designated as military grade or “enhanced plastic” are designed and intended for use in military/aerospace applications or environments. Buyer acknowledges and agrees that any military or aerospace use of TI components which have ***not*** been so designated is solely at the Buyer's risk, and that Buyer is solely responsible for compliance with all legal and regulatory requirements in connection with such use.

TI has specifically designated certain components as meeting ISO/TS16949 requirements, mainly for automotive use. In any case of use of non-designated products, TI will not be responsible for any failure to meet ISO/TS16949.

Products		**Applications**	
Audio	www.ti.com/audio	Automotive and Transportation	www.ti.com/automotive
Amplifiers	amplifier.ti.com	Communications and Telecom	www.ti.com/communications
Data Converters	dataconverter.ti.com	Computers and Peripherals	www.ti.com/computers
DLP® Products	www.dlp.com	Consumer Electronics	www.ti.com/consumer-apps
DSP	dsp.ti.com	Energy and Lighting	www.ti.com/energy
Clocks and Timers	www.ti.com/clocks	Industrial	www.ti.com/industrial
Interface	interface.ti.com	Medical	www.ti.com/medical
Logic	logic.ti.com	Security	www.ti.com/security
Power Mgmt	power.ti.com	Space, Avionics and Defense	www.ti.com/space-avionics-defense
Microcontrollers	microcontroller.ti.com	Video and Imaging	www.ti.com/video
RFID	www.ti-rfid.com		
OMAP Applications Processors	www.ti.com/omap	**TI E2E Community**	e2e.ti.com
Wireless Connectivity	www.ti.com/wirelessconnectivity		

Mailing Address: Texas Instruments, Post Office Box 655303, Dallas, Texas 75265
Copyright © 2015, Texas Instruments Incorporated